# The Madhouse of Tasha's Kiss

A maddening adventure for the world's greatest roleplaying game.

By Remley Farr & Jeff C. Stevens

# *The Madhouse of Tasha's Kiss*

Version 1.2


**Background: Nimgyu**

**Cartography: Mobral Rox**

***@mobralrox***

**Cover Art: Svetoslav Petrov**

***@SvetoslavPetro9***

***https://www.deviantart.com/svetoslavpetrov***

**Editor: Brent Sweany**

***@brentsweany***

**Internal Art: Luiz Prado**

***@LuizPradoArt***

***https://www.deviantart.com/savedra***

**Layouts: Jeff C. Stevens**

**Produced by: Jeff C. Stevens**

**Special Thanks: Ken Carcas, Drew Derby, and Chad Lensch**

***Written by: Jeff C. Stevens & Remley Farr***

***@jcorvinstevens @remleyfarr***



DUNGEONS & DRAGONS, D&D, Wizards of the Coast, Forgotten Realms, the dragon ampersand, *Player's Handbook, Monster Manual, Dungeon Master's Guide,* D&D Adventurers League, all other Wizards of the Coast product names, and their respective logos are trademarks of Wizards of the Coast in the USA and other countries. All characters and their distinctive likenesses are property of Wizards of the Coast. This material is protected under the copyright laws of the United States of America. Any reproduction or unauthorized use of the material or artwork contained herein is prohibited without the express written permission of Wizards of the Coast.

©2016 Wizards of the Coast LLC, PO Box 707, Renton, WA 98057-0707, USA. Manufactured by Hasbro SA, Rue Emile-Boéchat 31, 2800 Delémont, CH. Represented by Hasbro Europe, 4 The Square, Stockley Park, Uxbridge, Middlesex, UB11 1ET, UK.

All other original material in this work is copyright [2018] by Jeff C. Stevens and published under the Community Content Agreement for Dungeon Masters Guild

## Using this Supplement

No specific location is mentioned in this supplement, making it easy to insert into most campaigns.

> Text in these yellow boxes is to be read to players.

Text in grey boxes is for the DM only and should not be read to players.

Most of the creatures in this adventure are found in the 5th Edition *Monster Manual*. Page numbers have been included for easy reference but depending on the printing edition of your *Monster Manual*, they may not match.

In addition, several new creatures have been created for this supplement. They are noted in **BOLD** with no *Monster Manual* reference. You can find these creature stat blocks at the end of the adventure in **The Creatures of the Madhouse** appendix.

Unless otherwise noted, all NPCs have the stats of a **commoner**.

## Average Party Level

The **Average Party Level (APL)** can be used to calculate the appropriate challenge level for your party. To calculate the APL, add the total levels of all characters and divide the sum by the number of characters (rounding up for .5 or greater).

## Skill Checks and Saving Throws

Specific DCs are written for each of the encounters. You may wish to change these DCs based on the APL of the adventuring party. We suggest the below range:

| APL | Check / Save DC |
|---|---|
| 1st thru 3rd | 11 |
| 4th thru 6th | 13 |
| 7th thru 9th | 16 |
| 10th thru 12th | 19 |
| 13th thru 15th | 22 |

In addition, if you feel a skill check or saving throw DC is too low or too high, feel free to adjust the DC as you wish.

## Madness

Several rooms in this adventure may cause a PC to roll to avoid short-term or long-term madness. These tables are found in **Chapter 8: Running the Game** in the *Dungeon Master's Guide*. That chapter also lists spells which may be effective in suppressing or ridding a creature of madness.

For this adventure, whenever a creature fails a madness saving throw and suffers either short-term or long-term madness, they also gain one point of continuing madness until the end of the adventure.

Once a creature has accumulated 3 points of continuing madness, that creature then rolls on the Long-Term Madness table, gaining that effect until targeted by the *lesser restoration* spell or similar magic.

Once a creature has accumulated 5 points of continuing madness, that creature then rolls on the Indefinite Madness table, gaining that flaw until targeted by the *remove curse* spell.

A **Character Madness Tracker** is found at the end of the adventure, which you may hand out and allow the players to track their own madness.

If you find the Madness saving throws are failing too often, adjust the DCs down so that the adventurers have a better chance of making the saving throw.

## Maps

Unless otherwise noted, for all maps:
1 square = 5 feet.

## Rooms

Except for where walls are obvious on the map, the rooms in the madhouse have no walls. Instead, the rooms are surrounded by darkness. A creature stepping off the edge of a room falls 20 feet and then materializes 10 feet above an unoccupied space from where it stepped off, suffering 3d6 bludgeoning damage and landing prone, unless it avoids taking damage from the fall.

## Doors, Portals, and Exits

Once inside the madhouse:

- The brass door used to enter the madhouse disappears
- The only way to exit the madhouse is by destroying Tasha's Kiss
- The doors inside the madhouse are portals which lead to different rooms constructed within this pocket dimension
- The portals resemble large clown-like faces with a large, dark opening in the mouth

## Using NPCs

Throughout the adventure, the party is introduced to several NPCs. These NPCs can follow the party throughout the adventure, but they may become a nuisance. To limit their actions, you may wish to have the NPCs cower in fear as they wait for the adventurers to find a way to free them.

## You Are Empowered

As mentioned above, you do not have to run these encounters as written. You (as the DM) are empowered to make changes as you wish – adjusting the encounters as the game is played, if you like. You are part of the collaborative storytelling that is Dungeons & Dragons and you know best how to adjust the encounters so that your adventurers get the most out of the session and story.

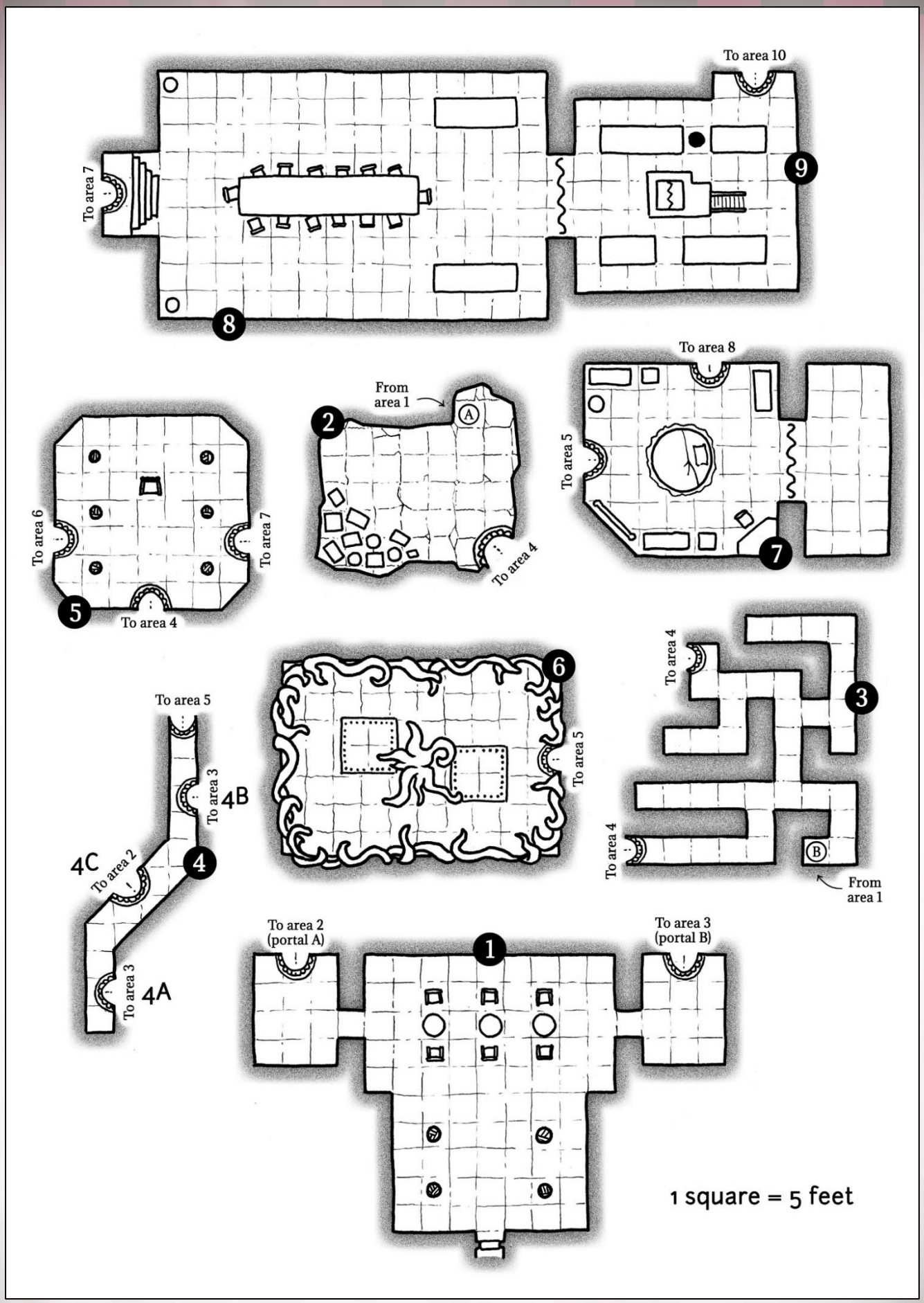
To area 10
To area 7
9
8
To area 8
From area 1
2
A
To area 5
To area 6
To area 7
To area 4
7
5
To area 4
6
To area 4
3
To area 5
To area 5
4B
4C
To area 2
4
To area 4
B
From area 1
To area 2 (portal A)
1
To area 3 (portal B)
To area 3
4A
1 square = 5 feet

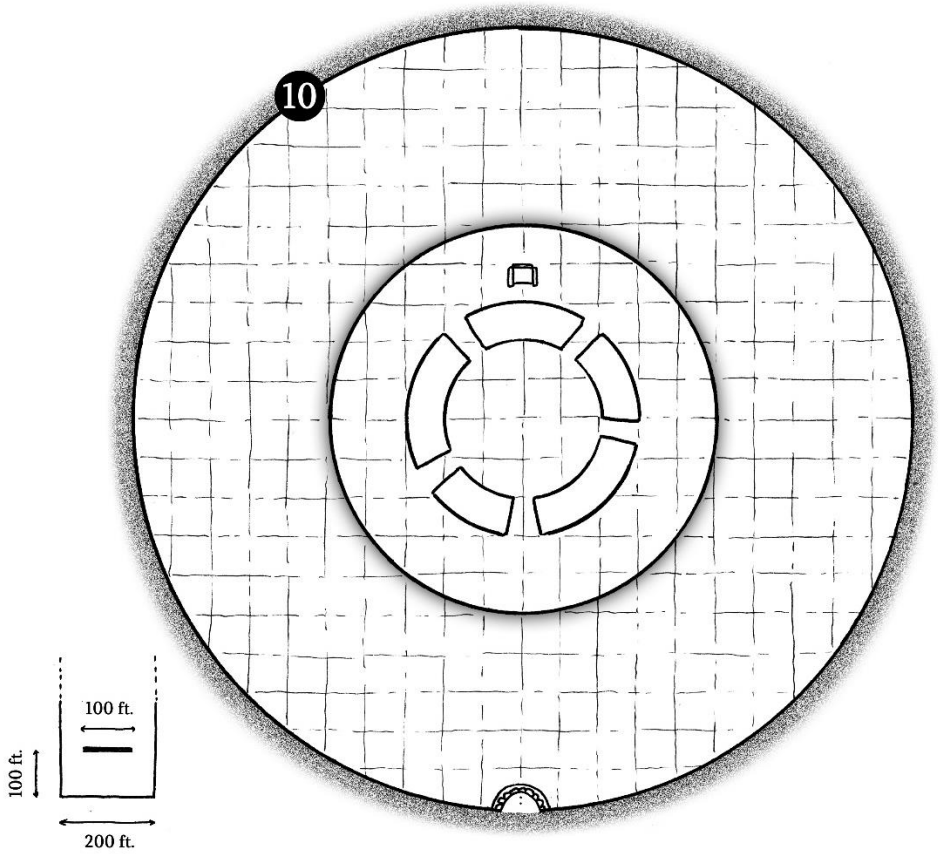


(1 square = 10 feet)

# Adventure Primer

*The oldest and strongest emotion of mankind is fear, and the oldest and strongest kind of fear is fear of the unknown.*

- H.P. Lovecraft

# Background

Tasha's Kiss is a well-known jester who travels the Realms entertaining kings, lords, cities, villages, and children. A happy and talented performer, Tasha's Kiss is a beautiful human woman with fantastic red and white face paint and a red and black harlequin-style costume.

Named after her favorite spell – *Tasha's Hideous Laughter* – Tasha's Kiss uses her spells to incite laughter and joy into those around her.

Unfortunately, a demon took a liking to the jester. Drawn to her by her fame, her look, and her charismatic prowess, the fiend possessed her, and now manipulates the famous jester to lure victims into its pocket dimension where it terrorizes and consumes those who enter the dimension it calls 'the madhouse', where it can feed on their bodies and souls.

In addition to using suggestive magic, the demon uses the jester's normal, beautiful form to interact with villagers and to coerce them into her wagon, which contains an entrance to the pocket dimension – the madhouse. Inside the madhouse, the demon transforms her body into a grisly form with spider-like legs.

# Adventure Hooks

There are several ways this adventure can be introduced into your ongoing campaign:

- ✓ The party stumbles upon the village currently being visited by Tasha's Kiss.
- ✓ The party is sent to investigate a village after merchant shipments have ceased.
- ✓ Tasha's Kiss is currently in the home village of one of the party members.

# Adventure Breakdown

The adventure is made up of four parts:

***Part 1: The Beginning.*** Using one of the adventure hooks, the party finds themselves in an empty town. Searching the town reveals a large, circus-style tent. Inside the tent they find a weeping boy sitting next to a fantastic wagon.
***Part 2: The Madhouse.*** By using a portal found in the wagon, the adventures enter a pocket dimension created by a fiend that possessed the original owner of the wagon. The fiend's pocket dimension contains several rooms which may cause adventurers to go mad.
***Part 3: Tasha's Kiss.*** The adventurers reach the final room of the madhouse where they must confront the fiend if they want to leave the pocket dimension.
***Part 4: Conclusion.*** The adventurers have successfully defeated the fiend. They may also have to help the hundreds of people they saved from the pocket dimension.

# Part 1: The Beginning

Estimated run-time: 30 minutes

*This section assumes the adventurers happen upon the small village or town while they travel to their next destination.*

When you are ready to begin the adventure, read or summarize the following:

> The village resembles a ghost town. The streets are empty, yet garments hang on clotheslines, flapping gently with the breeze. Two malnourished horses are tied to a hitching post in front of a tavern.
>
> The wind picks up, causing shutters to slam against a small building, breaking the silence.

### Investigation of the Town

Investigating the town, the characters find it empty. Flyers are pinned to building posts and are found in the tavern that read 'Come one, Come all! To see the marvelous Tasha's Kiss!'

The horses appear to be in the early stages of starvation and are severely dehydrated.

Footprints, wagon tracks, and other prints are mostly erased from the road, having been brushed away by recent rain and winds.

### Who is Tasha's Kiss

A successful **Intelligence (History)** check reveals the following (Bards have advantage on the check):

| DC | Result (results are cumulative, revealing all of the information from lower DCs) |
|---|---|
| 10-11 | I've heard of a jester called Tasha's Kiss. |
| 12-15 | She travels to cities and towns, performing for the people. |
| 16-19 | She wears a red and black checkerboard outfit and paints her face white. |
| 20+ | I saw her perform once. She was amazing! |

## The Weeping Boy

Soon after their arrival (or while investigating the village) the party sees a large circus-style tent, decorated in a white, red, and black checkerboard pattern, erected on the other side of town. From within the tent, the party hears a weeping boy. Read or summarize the following:

> Muffled cries come from the tent, breaking the ghostly silence.

When the party enters the tent, read or summarize the following:

> A young boy, perhaps 9 or 10 years old, sits next to a magnificently constructed wagon which rests in the middle of the tent. The boy quietly weeps while holding a piece of paper in his hands.

### The Boy

The boy's name is Gentry Hull. He's the only person remaining in the village. All others have been coerced to enter the wagon, which acts as a portal to the pocket dimension of Tasha's Kiss… the madhouse.

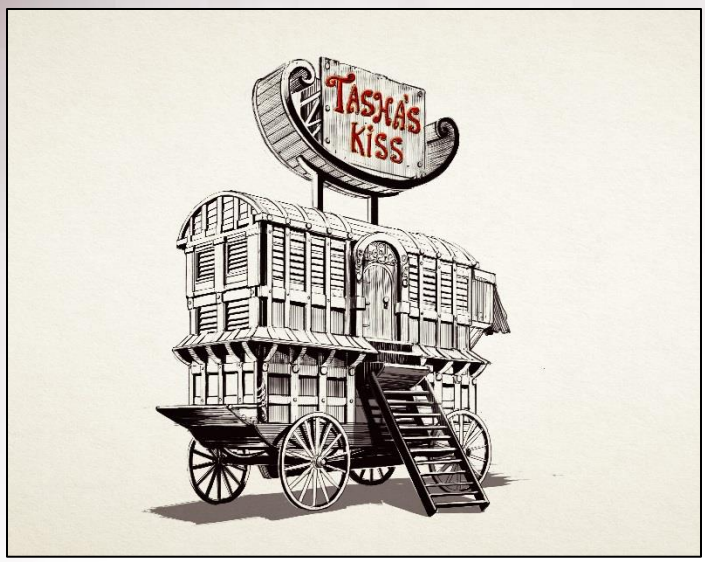


If questioned, Gentry has the following information to share:

- Everyone in the village went to see Tasha's Kiss.
- His mother, father, and big sister went in.
- Although she is a pretty clown, he doesn't like clowns. He says, "Clowns freak me out!"
- She wore red and black clothes, had a white face, and a floppy hat with bells on it.
- He was outside playing while the other villagers watched her perform.
- He didn't notice it get quiet, but it did. He looked around town for people and saw them going into this tent. He peeked in and saw them enter the wagon. The entire town!
- He wasn't going in. No way! No how!
- The door won't open anyhow.
- This happened five days ago.
- No one has come out since.

Gentry's a pretty resourceful young lad. He's been making himself meals, though some of the concoctions aren't very appetizing. Mixing preserved tomatoes and peaches together isn't as tasty as one would think.

He goes home every night, but returns to the wagon every morning, hoping for the door to open and for his family to walk out.

### Gentry's Family

***Tabitha*** – Gentry's big sister. She's 15 years old and has long red hair. Although, she's a pain to live with, he misses her.
***Migal*** – Gentry's father. A stout, balding human. He's missing an eye, now covered with a black patch. He had an accident when he was a child, but he won't tell Gentry what the accident was.
***Sandy*** – Gentry's mother. A stout woman with amber hair. She's always wearing an apron, mainly because she bakes all the time. His mother owns the local bakery and is famous for her sourdough bread knots.

If asked about the population of the town, Gentry explains he's never counted the number of people in town, but he guesses there to be 53 people in all.

## Tasha's Wagon

Tasha's wagon is an amazing piece of work. Its exterior is well-constructed and is embellished with gold foil scroll work. Across each side of the wagon are the words 'Tasha's Kiss.'

### Entering the Wagon

The door to the wagon isn't locked. Gentry just wasn't strong enough to pull it open.

The interior of the wagon is just as impressive:

- Plush, red velvet cushions line a bench along the back of the wagon.
- A grand wardrobe, its door slightly ajar, lines one of the walls.
- A large mirror stands above an oak makeup table.
- A basket of rolls and fruit rests next to the makeup table and, surprisingly, are still fresh.

## Searching the Wagon

A creature searching the wagon and succeeding on a **DC 14 Wisdom (Perception) or Intelligence (Investigation)** check finds the following:

- 3 pots of makeup - one each of red, black, and white
- 3 complete disguise kits
- A leather pouch containing 50 gp
- A fancy, red satin dress

A creature succeeding the check by 5 or more finds:

- A *ring of feather falling*
- A *potion of climbing*

## The Wardrobe

The wardrobe is empty of clothing. Instead, a flight of stairs leads down and into darkness. The stairs are not visible from outside the wagon.

## The Stairwell

Using the stairwell leads the party to the entrance to Tasha's madhouse and to the first room of her personal dimension – The Sorting Room. The entrance is a one-way portal. Once someone enters, they can't leave unless they destroy the fiend.

> The stairs descend 60 feet, level off for 50 feet and then ascend for 130 feet, ending at a grand brass door with the words *Tasha's madhouse* expertly engraved across the brass.

## Developments

After the party passes through the brass door, it disappears.

# Part 2: The Madhouse

Estimated run-time: 150 minutes

*This section assumes the adventurers enter the madhouse using the stairwell found in the wardrobe. The madhouse is a pocket dimension used by the demon who now inhabits the body of Tasha's Kiss.*

## Area 1: The Sorting Room

The brass door opens to a room where faceless humanoids move about, sorting those who enter the room into groups and directing them to one of two portals – one for cooperative clients, the other for the uncooperative. The faceless humanoids speak via telepathy.

As the adventurers enter this room, read or summarize:

> The door swings inward, quietly opening to a room with three small tables in the center, a wooden chair rests on either side of each table.
>
> Two of the tables are currently occupied – a normal looking human sits across from a faceless humanoid. The human's eyes are closed, and an expression of joy fills its face. The hands and fingers of the faceless creature across from it chaotically dance, as if the creature is weaving the air.
>
> A gnome woman walks up to you, her face an empty palette with no features, only skin. She holds a book and a writing implement.
>
> Her body gestures as she speaks to you, though she has no mouth. Her words come to you in your native tongue as she speaks to your mind. "Good, good!" she says. "Please, take a seat!"

### Josaphine

Josaphine is the **Dream Weaver** in charge of the Sorting Room. She and four more faceless

humanoids work to sort those who enter the madhouse.

### Dream Weavers

Including Josaphine, there are a total of five Dream Weavers in this room. The fifth Dream Weaver stands near Portal B, its **weaver prod** at the ready, in the event someone standing at Portal B acts out.

The Dream Weavers do not attack unless provoked, in which case they use their mind blast ability and weaver prods to restore balance in the Sorting Room.

The Dream Weavers sitting at the tables use magic to construct pleasant thoughts and visions within their clients' minds. Joy, serenity, peace, love – these are all things the Dream Weaver tries to build. The cooks in *Area 6: Pigs, Pies, and Puddings,* find that happy beings make for better spice, which Tasha's Kiss prefers.

**Weaver Prod**
*Weapon, uncommon*

Formed from sand struck by the breath of a blue dragon, the Weaver Prod is a 12-inch long piece of jagged, blue glass fastened to a wooden handle. The glass contains a residual charge from the dragon's breath weapon.

On a hit, the Weaver Prod deals 1 point of piercing damage plus 1point of lightning damage.

## Weaving

Josaphine directs the adventurers to take a seat at one of the tables. When she does, one of the current human clients from the village **(Bart)**, who has a large smile across his face, is moved to Portal A. He looks at the party, claps his hands together, and says, "Isn't this place just marvelous?" as he stands in front of the portal.

The other client **(Gram)**, an old human woman with squinty eyes and a wrinkled face covered in a scowl, is moved to Portal B. She looks at the party and says, "I don't like this. Not one bit!"

Unless the Dream Weavers are killed, these clients enter the portals when the adventurers do.

When a creature sits at the table, the Dream Weaver begins to weave its magic. Each creature sitting at a table must roll a **DC 12 Wisdom** saving throw.

On a failed save, the creature is overcome by the feelings of joy, love, and happiness. They find their current situation pleasant and they can't wait to experience more of this new, exotic place. They happily move to **Portal A** when they are directed.

On a successful save, the creature is unaffected by the weaving and may continue as it likes, though it is directed to stand at **Portal B**.

Creatures the refuse to sit at the table for a weaving are directed to stand in front of **Portal B.**

## Portals

There are two exits from this room. Each exit is a portal designed to resemble the face of a laughing clown. Using either of these exits teleports a creature to the teleportation location marked below:

***Portal A*** leads to *Area 2: The Laughing Man*
The Dream Weavers order the adventures to enter the portal.
***Portal B*** leads to *Area 3: The Mirror Room*
The portal is false. Instead, the floor the creatures are standing on dissolves. They find themselves falling for several minutes and then appear in *Area 3: The Mirror Room*, landing prone and suffering 1 point of bludgeoning damage.

These portals are one-way. They cannot be used to return to *Area 1: The Sorting Room*.

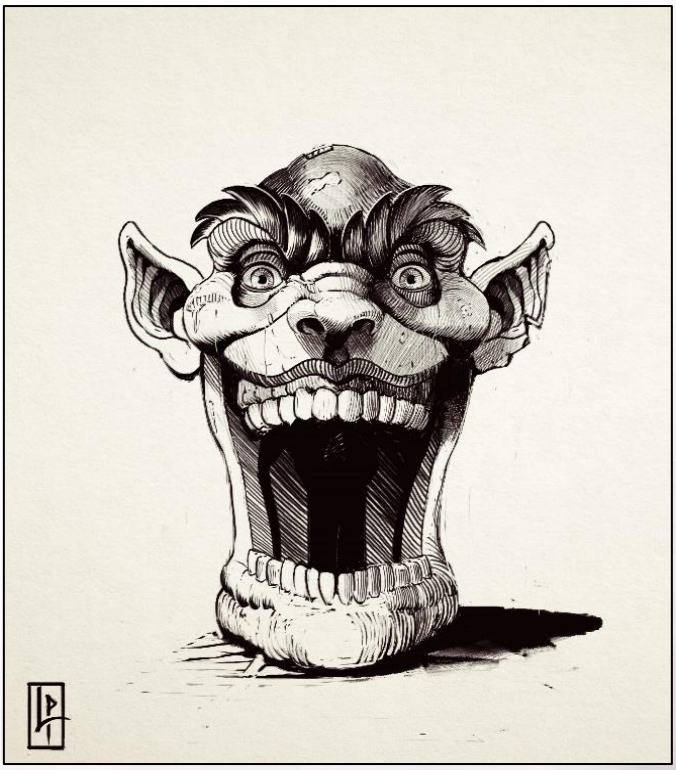

### Bart

Bart (L/N, **commoner**) from Gentry's village. His weaving was successful and he's happy to be here, excited to see what else is in store for them.

If Bart is used as an NPC throughout the adventure, he is consistently happy and curious. His weaving was very successful, and he sees everything as an interesting, new experience. He won't understand why the adventurers are attacking creatures and he may even fight against the adventurers.

### Gram

Gram (N/G, **Thug**, MM, p 350) from Gentry's village. She has sixteen grandchildren who all call her Gram. She heard the nickname so often that she decided to use it all the time. She does not know what is going on in here, but she doesn't like it. Not one bit!

If Gram is used as an NPC throughout the adventure, she constantly questions everything the adventurers come across. If she is with the party when they encounter the cooks in **Area 6**, she picks up a rolling pin (club) and joins the fight against the cooks.

### Developments

Depending on their actions and their willpower, the party may become divided as they are sorted. If this occurs, the adventure is designed so they regroup quickly.

*Area 1: The Sorting Room*, cannot be accessed again using the portals.

## Area 2: The Laughing Man

The adventurers access this room by:

1) Being teleported here from the *Area 1: The Sorting Room*
2) Using the portal from the hallway

As the adventurers enter this room, read or summarize:

> Humor and hate clash in your head as a stench of dry, barren rot fills this stone room. Several crates lie stacked in a corner. Glass jars rest on top of them. A man laughs in the distance--the same man weeps.

**Deggmir, Winnower of Souls** works for his mistress in this chamber. He is skilled in separating souls from physical bodies, bringing a "false death" to his clientele. To Deggmir, souls are the source of guilt and despair--barometers of morality that guide thoughts and feelings towards a sense of compassion. Deggmir knows here are those whose lives require this compassion to be ripped and muted. Deggmir excels in such art.

Like a leech dredging bad blood, Deggmir has the ability to siphon away his client's guilts and horrors, bottling them away so that his clients can go on living without that nagging feeling of "I was involved in something wrong." With enough coin, Deggmir can peel away the pain and replace it with apathetic ambrosia. He is the spiritual surgeon, grafter of scar tissue on souls.

But now he works for Tasha's Kiss and uses a different set of skills.

No longer a simple trader of outlawed clerical work, Deggmir's existence is chained to the plane where Tasha's Kiss makes her home. He doesn't hold back in his skills. He tears entire souls out of bodies, no longer merely dripping them of their toxins, and he cages them for use in Tasha's Kiss' later cavalcades. The experience for the victims is euphoric, causing the victim to laugh in splendor. The soul, however, shrieks in terror, knowing that whatever heavens or hells previously awaited it are no longer available. To come to terms with his actions, Deggmir has pierced himself with his own hooks, chains, and blades that allow his own soul to "drip" away, placating his guilt in tearing asunder his victims.

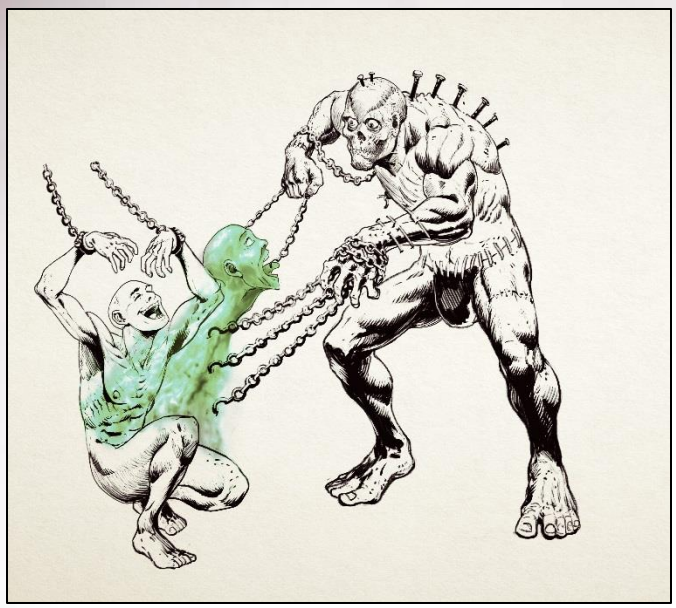

## The Encounter

When the adventurers enter Deggmir's workshop, he is in the middle of separating a soul from a townsfolk **commoner**. If the adventurers are stealthy, he won't be alerted. Even so, he isn't aggressive should he notice them. He's merely doing his work. Upon the party seeing Deggmir's workshop in its entirety, they notice:

> A bald man with a neanderthal-like face works at a series of chains. He's covered in hooks and spikes, self-inflicted wounds leaking an unnatural, green miasma that dissipates into the air. The chains, which are attached to pulleys, are latched onto to a ghostly figure. The figure shrieks as it is pulled out of an identical, human equivalent of itself. The human is laughing maniacally. A few lifeless bodies lie stacked in a nearby pile. Crates and tables covered in glass jars and rusty tools lay in the corner.

**Bart**

When Bart sees the above, he becomes excited, raises his hand, and says, "Oh, that looks like fun! I'm next!"

## The Townsfolk

If the townsfolk's soul notices the party, it begs them to "not let him take me out!" The laughing, mortal villager argues to "let him keep going!" Deggmir doesn't pay the party any mind until he is done with the separation, which takes 1d4+1 rounds after the party witnesses the scene.

## The Laughing Man

If the soul is separated, the body dies and Deggmir traps the soul in a jar, which he sets aside. Deggmir is more than happy to converse with the adventurers about his trade. He speaks with a rattly voice, but his vocabulary is that of a scholar. He explains the details of his job as though there is nothing morally wrong about it. Regarding "why" he separates the souls for Tasha's Kiss, he says it gives him peace and purpose, and what does anyone want in the world except for peace and purpose? Deggmir is quick to use his **soul scen**t (see Stat Block) on the party, questioning them about their reasons for doing what they do--trying to pry out a justification.

Deggmir has 2d6 jars filled with souls on his table. Opening them frees the soul.

## Gift from the Souls

If the souls are released from the jar, they bestow a gift on the creature that freed them, granting that creature the following blessing:

***Blessing of Weapon Enchantment.*** One nonmagical weapon in your possession becomes a +1 weapon whenever you wield it.

## Combat

Should there be a fight, Deggmir attacks with his chains, but he first tries to distract the party by smashing a jar he keeps pocketed away on his person. The jar contains the residue of his own soul (see *Scaling Combat, p 15*) that he has been siphoning away, which attacks the party.

### Bodies in the Corner

The bodies are withered and gnarled, as if they had been dried, purged of water, and petrified. Nothing of value is found on the bodies.

### Developments

The party may attempt to exit the room without defeating Deggmir. The portal in the room leads them to *Area 4: The Hallway*.

**Madness**

Any creature that can see Deggmir and his actions must succeed on a **DC 12 Wisdom** saving throw or suffer the effects of short-term madness for 1d10 minutes.

That creature also gains one point of continuing madness.

**Scaling Combat**

Make the following adjustments to Deggmir's Stat Block

**APL 3:** AC 14, 65 HP, +5 to hit
Deggmir does not release his soul from the jar.

**APL 5:** As written
Deggmir releases his soul from the jar (**Ghast**, MM, p 148 without Stench ability)

**APL 7:** AC 17, 120 HP
Deggmir releases his soul from the jar (**Wraith**, CR 5, MM, p 302).

**APL 10:** AC 18, 120 HP, +9 to hit, Deggmir makes three attacks.
Deggmir releases his soul from the jar (**Wraith**, CR 5, MM, p 302).

## Area 3: Mirror Room

As the adventurers enter this room, read or summarize:

> A winding maze of mirrors along the room creates an uneasy feeling. The reflections looking back match your movement, but they show different lifestyle outcomes. These are the choices you didn't make in life.

Does the rogue see herself smiling with a pregnant belly? Does the cleric of Torm see herself dressed in jagged vestments of Asmodeus? Maybe the sorcerer sees his own severed hands wrapped around his chained body, a right punishment for "that crime he almost got caught committing at the academy" two years ago?

The goal of this room is to play on your PC's backgrounds, possibly providing a good roleplay moment. Was there a key moment in a previous adventure where the PC had to make a choice? The other choice may manifest itself in one of these mirrors.

Anyone touching a mirror with bare skin swaps places with the reflection. The PC in its current iteration is the reflection, and whatever version resided in the mirror now exists in the real world, controlled by the player. The player decides what life choices led to this "new version" of themselves. Where did the split happen? How does this new iteration of themselves act? More importantly, does the new PC desire to go back into the mirror and allow the real PC back into the world?

The mirrors are easily smashed. Any rendition of a PC within a mirror when it is smashed becomes lost forever.

**Gram**

When Gram enters this room, she hops up, brushes herself off, and says, "Well, let's get moving!" The woman has a strong will and has advantage on all saving throws while in this room.

### Note to the Dungeon Master

This room has the potential to change your PCs and possibly your whole campaign. Your players may enjoy this new aspect, or it may devastate them. A PC getting killed is one thing (it happens) but having their core attitudes changed may make players unhappy, possibly being upset with their new versions. To dodge this, you can have the PCs revert to normal after a long rest, impose a time limit for them to revert to normal (1d20 x 10 minutes), or make breaking the mirror reverse the effect.

### Madness & Fear

Being in this room longer than 10 minutes induces madness and fear. The reflections begin "reacting" to their respective PC. Fear checks and madness checks ensue, starting with **DC 10 Wisdom** saves, then an additional save every minute afterwards, increasing the save DC by 1 for each additional save. Failure means fleeing from the room by any means necessary.

That creature also suffers the effects of short-term madness for 1d6 minutes and gains one point of continuing madness.

## Area 4: The Hallway

The hallway allows access to Areas 2, 3, and 5.

### 4A: One Way

This portal only allows access into Area 3. Creatures from Area 3 may not exit that area using this portal.

### 4B: Wrong Way

This portal only allows access from Area 3. Creatures may not enter Area 3 using this portal. If they attempt to do so, the mouth animates and says, "Wrong way, buddy!"

### 4C: To the Laughing Man

This portal allows access to and from Area 2. If Area 2 has not yet been encountered, read or summarize:

> From the darkness of the portal comes a mysterious sound. A man cries out, "No! Please, no!" Then the same voice laughs, "Yes! Yes!"

## Area 5: Chimaera Chron

As the adventurers enter this room, read or summarize:

> Darkness extends in every direction. The only light source is a beam of light illuminating a seated creature in front of you. Imagine a culmination of everyone in your party, as though you all somehow had a child with a bit of everyone's characteristics. Now imagine that child was an adult with all the training, knowledge, and gear your party has at this moment. Now imagine that creation sitting in a chair, staring at you. Finally, imagine there is no way out.

The entry the characters used to enter this room exists no more. There are no immediate exits. There is only the creature in front of them that uncannily resembles the party as one entity. The creature is armed with their weapons, knows their spells, and is privy to every memory they have.

It uses all of these tools against them, typically in the following fashion:

1. **Incite Dissention.** What secret does the party's half-orc sorcerer have about her past life? Has the party's tiefling fighter been stealing gold pieces from the party's community chest? Did the party's halfling warlock kill his family at

his patron's demands? The Chimaera Chron knows all of this and shares information accordingly.

2. **Familiar Ground.** Chimaera Chron reshapes the room to match a familiar location for one of the PCs. Is it a happy hometown? A grisly battleground? The town itself from the beginning of this adventure?
3. **Devil's Bargain.** Chimaera Chron allows the party safe passage from here on out as long as each adventurer offers it one permanent memory. The memory must have significance, like the face of a loved one or a wedding night promise. This memory could also be something terrifying. The submitted memories are forgotten by the PCs and replaced by another memory in Chimaera Chron's mental inventory or one of its own creation. The PC believes this memory as though it were true.

## Memory Bank

- **Party of One.** In a fight, Chimaera Chron, stat-wise, is every party member. Choose a PC at random--Chimaera Chron's stats are a copy of that PC's character sheet. When defeated, Chimaera Chron is "reborn" as a different PC. Only when all incarnations of it are killed is Chimaera Chron defeated.

## Combat

During combat, Chimera Chron continues asking for a memory. Once a creature does so, Chimera Chron breaks off combat with that creature and says, "You shall pass."

The truce is lifted if that creature attacks Chimera Chron again.

### Madness

Any creature that sees itself defeated must succeed on a **DC 14 Wisdom** saving throw or suffer the effects of short-term madness for 1d10 minutes.

That creature also gains one point of continuing madness.

## Developments

Once Chimera Chron has been dealt with, either by trading memories or by defeat in combat, the party is free to use the other portals in this room.

### Note to the Dungeon Master

In the event physical character sheets are not available, you may substitute the below to represent each of the party members. Once one of the below falls, another of these creatures takes its place until all PCs have been represented and defeated.

Fighter – use Veteran (CR 3)
Sorcerer – use Transmuter (CR 5)
Warlock – use Enchanter (CR 5)
Monk – use Martial Arts Adept (CR 3)
Rogue – use Master Thief (CR 5)
Ranger – use Archer (CR 3)
Bard – use Bard (CR 2)
Cleric – use Priest (CR 2)
Wizard – use Illusionist (CR 3)
Paladin – use Gladiator (CR 5)
Druid – use Druid (CR 2)
Barbarian – use Berserker (CR 2)

## Chimera Chron's Memory Bank Table:

| | |
|---|---|
| 1 | Your parents want you to come home. They live at the capitol city. One of them is dying. |
| 2 | A random party member declared unconditional love to you. Even though you rejected it, that love remains. |
| 3 | A former lover/spouse was slain by a demon. One item you carry was that person's keepsake. |
| 4 | You were engaged to marry, but your betrothed sabotaged your nephew's *gate* spell, teleporting you to layer 222 of the Abyss. His parting words, "Share my love with you? I won't even share this *world* with you." (This is one of Affavara's memories. She gave it up to keep the illusion that her fiancé still loves her.) |
| 5 | You have a son named Gentry Hull. He doesn't impress you, and you know that makes you a horrible parent. (Gentry Hull's father wants to love his son. He gave up this memory so that he could.) |
| 6 | That "family heirloom" you hark about was stolen from a corpse. You helped create that corpse. |
| 7 | She would still have her sight if you didn't drop her. |
| 8 | It was cold. You were sick. The blizzard covered their cries. Even if you weren't sick, there was no way you could have heard them. Maybe? Hopefully. Burying them was a sure waste of a weekend. |
| 9 | The bard heard too much. No way was your secretgoing to be part of his next song. |
| 10 | Morthania the Hag hexed your fate. A loved one will die in 3d6 months unless you bring Morthania a demon's backbone. (not really, but the PC is convinced this is the case) |
| 11 | You had an affair. She never found out. The homewrecker you hooked up with died in a raid. But *you* still know... |
| 12 | An angel once wept after hearing your singing. You promised it you would never sing again. |
| 13 | The weapon you carry was stolen from a great adventurer who died not long after the theft. Had the adventurer still possessed the weapon, the adventurer would still be alive. |
| 14 | Your desire to be a knight as a child ended up with a friend dying during a playfight. Nobody else knows. |
| 15 | You have unfleeting, romantic feelings for someone very close to you. |
| 16 | You can barely sleep. Elder Rowan is stalking you. He will find you. He will kill you… one day. |
| 17 | You know the secret recipe for the best-tasting coffee to ever reach the Sword Coast--you can be rich! Though one of the secret ingredients is Halfling tongue. |
| 18 | You know the way to a treasure cache, and the desire to go there is extremely tempting. |
| 19 | Grysttl'kurd, your black dragon master, tasked you with taking care of his newly spawned hatchling, Hexagrysttl, but you lost the dragon whelp in the swamp. Grystll'kurd is after you. |
| 20 | You have had an imaginary friend named Bellow since you were a child. Bellow is a bullywug, and he constantly urges you to do terrible things to others. |

## Area 6: Tentacle Mass

As the adventurers enter this room, read or summarize:

> The floors and ceiling writhe. They pulse. They gurgle. They breathe. A closer inspection reveals the floor is a mass of tentacles. Dominating the center of the room is a tentacled mass sitting between two large cages. The villagers within one of the cages scream in terror, while in the other they mumble incoherently--they are broken shells of their former selves. A mass of tentacles stoops over one of the cages. It has just popped the arm off of a screaming woman and shoved one of its own dislocated tentacles into the socket where her arm used to be.

The tentacle mass is **Affavara, the Banished Bouquet**. She was once an elven noble engaged to a handsome prince until her sorcerous nephew mis-transcribed the summoning circle to bring her to the wedding. Instead she appeared on the 222nd plane of the Abyss, the domain of Zuggtmoy the Demon Queen of Fungi. The wedding dress-clad elf reacted to the planes magic, becoming a shambling mass (bouquet of plant-like tendrils. Impressed at Affavara's beauty, Zuggtmoy chose her as the bouquet for her wedding to Araumycos then tossed Affavara back to the planar void where Tasha's Kiss caught her in the pocket dimension. She's lived in the wagon ever since.

Affavara longs to be an elf again, but her new form affects her mental cognition as well as her physical state, so she's tearing at people's body parts like a child pulling wings off of flies. Her own wormy mass has twitching humanoid arms, legs, eyes, and teeth peppered all over, but after a few days they fall off and she takes newer ones. She doesn't leave the victims to die--she replaces whatever body part she takes from them with one of her tendrils, but the villagers control the tendrils in a haphazard manner as though these new appendages have minds of their own.

The cage of cross-stitched people is, understandably, a nightmare.

### Cages

The barred cages are 10-feet-tall with a locked hatch at the top of each cage. Each lock can be picked with a successful **DC 15 Dexterity check using thieves' tools**, or by using the key which dangles from one of Affavara's tentacles.

The cage on the right holds ten villagers who have been touched and transformed by Affavara – each with an appendage that has been replaced by a wriggling tentacle.

The cage on the left holds eight villagers who have yet to be changed by the monstrosity.

### NPCs

Gentry's mother, Sandy, is in this room, weeping in the right cage. Her left arm has been replaced with a tentacle.

### Combat

When Affavara notices the party, she doesn't see visitors, threats, or intrusions. She sees body parts. Whatever victim she's toying with falls away, and the villagers shout for help. The tentacle masses covering the room don't attack or impede the party aside from providing difficult terrain.

Though she doesn't attack, her flailing tentacles impose difficult terrain. In addition, if a creature is within 10 feet of Affavara at the start of its turn, it must succeed on a **DC 15 Dexterity** saving throw or be hit by one of Affavara's tentacles, suffering 1 point of bludgeoning damage and hearing of one Affavara's Echoes (see below).

### Affavara's Echoes

When Affavara touches someone's skin, roll on the Affavara's Echo table below and read aloud what the PC hears Affavara shout in their head.

## Possible Outcomes

- ✓ ***Deggmir.*** Removing Affavara's soul from her misshapen form can provide her with peace, especially if the PCs can put her soul in a jar and take it when they leave.

- ✓ ***The Baking Contraption.*** Getting Affavara into the baking machine causes the magic to reshape her into a shepherd's pie--which the contraption has never made before. She may prefer this form. If fed to someone, her soul takes control of the person's body. If the party can trick Tasha's Kiss into eating it, good on them for creating a proper demise for the penultimate villain.

- ✓ ***Slaying the Beast.*** Killing Affavara may be the best outcome. She cannot experience pain, and her dimwitted mind does not register the party's hostility. She thinks they are "cutting away the bad stuff." If her mass of tendrils is destroyed, the adventurers find a withered, deformed, female elf torso in the center, curled in a fetal position with thousands of tendrils and tendril stumps emanating from her.

    - *It hurts so good!*
    - *Yes! Yes! Yes!*
    - *Cut it away! Cut it all away!*
    - *Off with the bad, on with the good!*
    - *Oh, I want your head! It's so pretty!*

- ✓ ***Running Rampant.*** Lying, goading, or convincing Affavara to "run loose" anywhere in the madhouse can provide a good distraction for the party. She'll try to replace pieces of herself with body parts from other creatures she comes in contact with.

### Madness

Any creature that enters this room and can see Affavara must succeed on a **DC 12 Wisdom** saving throw or suffer short-term madness for 1d4 minutes.

That creature also gains one point of continuing madness.

### Variant

Although it is written that Affavara does not attack the adventurers, if you have a party that enjoys combat, feel free to have Affavara fight back.

## Affavara's Echoes Table:

| | |
|---|---|
| 1 | "I just want to be pretty when he sees me again! I just want to go back home!" |
| 2 | "That touch… that caress… my fingers rot with every happy memory from home…" |
| 3 | "She was magnificent, that Lady of Rot and Decay. If only to be a petal in her hair…" |
| 4 | "Are you from the wedding? Did your runes falter, too? I can't find my shoes…" |
| 5 | "I was only 222 steps from home… That was all. But we went deeper, didn't we?" |
| 6 | "I miss my face. My pointed, elven face. Have you seen it? Do you have it!?" |
| 7 | "GIVE ME MY BODY BACK AND TAKE ME HOME YOU ABYSSAL DEMON!" |
| 8 | "The hands reject me… Will you reject me?" |
| 9 | "The fungal queen was nicer than this one. This one is no kiss I desire." |
| 10 | "My nephew was only an apprentice. He misdrew the runes. It's okay. It's okay. It's okay." |
| 11 | "Have you seen what floor 222 does to people? Can you see what it did to me?" |
| 12 | "... I am a rose--rotten, forgotten, decayed. There was a garden of elves. It may still be there." |
| 13 | "The Kiss keeps giving me legs, arms, and eyes, but they don't work THEY DON'T WORK!" |
| 14 | "Broken people. Broken faces. I keep piecing them together, but they won't stop screaming!" |
| 15 | "Are they my wedding gifts? They break too easily. The cage keeps them safe. For a while." |
| 16 | "The farm people bring me the ones they don't want." |
| 17 | "I dare not look into a mirror… What face will stare back?" |
| 18 | "Have you ever loved? Have you ever lost your love? Can you spare a heartbeat?" |
| 19 | "I didn't mean to break them. I tried putting them back together." |
| 20 | The affected PC sees flashing images explaining Affavara's curse. Be as descriptive as you want. |

## Area 7: The Bedroom

Tasha's Kiss doesn't need to sleep often. When she does she prefers the touch of soft, satin sheets, and being surrounded by a few of her favorite things.

As the adventurers enter this room, read or summarize:

> A large, round bed made with satin sheets of black and red checkerboard is in the middle of this room. Resting on tables, a vast collection of miniature model towns litter the room. Farms, chapels, rivers, bridges--you find examples of all such items in this showroom. Their details are carved intricately. One of these models sits on a small platform at the foot of the bed, its pieces slowing coming together, moving on their own.
>
> Several items stand out as well - a large, oval mirror with scintillating colors behind the glass, a brass lyre, a shortsword with an emerald encrusted hilt, and a teacup resting on its own pedestal.
>
> Shadows move behind a transparent blue curtain hanging from the west wall

### The Curtain and the Shadows

Behind the curtain is a *wall of force* which houses a collection of some of the demon's favorite creatures, still alive. A human girl with red hair (Gentry's sister **Tabitha**), a **Rust Monster** (CR ½, MM, p 262), and a **Hook Horror** (CR 3, MM, p 189). For one reason or another, the demon found these creatures to be of special interest. While behind the *wall of force*, they are passive, and do not require air, sleep, food, or water.

A lever along the wall deactivates the *wall of force*, allowing the creatures to leave their prison, they also revert to their instincts and the monsters attack the adventurers.

### The Models

The demon has visited several towns in her lifetime, and each town she has visited is represented by a model on a table in this room. These towns, though, aren't limited to little human outposts. Tasha's Kiss has visited Elven glades, Dwarven tunnels, and even Orc and Goblin camps.

The model at the foot of the bed is that of the town they arrived in at the beginning of the adventure "under construction". Perhaps even more harrowing, there are hundreds of blank tiles set aside for future conquests.

### The Teacup

A porcelain teacup, ivory in color and exquisitely detailed with gold filigree, rests on a 5-foot tall pedestal. This is one of human jester's most prized possessions. While traveling the Sword Coast, she had the pleasure of dining with a magnificent wizard named Perkins. The two had a joyful evening discussing lore and magic. She wanted a keepsake of the evening, so she purchased the teacup from the establishment where they dined.

The teacup has no special qualities. However, if the demon Tasha's Kiss sees someone with the teacup, she focuses all her attention and attacks on that individual while she screams, "That's my teacup!" The adventurers may use this against her, coaxing the human soul to the surface, encouraging her to fight the possession.

An adventurer succeeding on a **DC 13 Intelligence (Insight)** check believes the teacup must hold some emotional value. Why else would it be on a pedestal in a room filled with treasure?

### The Mirror

The mirror, its glass warped and bowed, was one of Tasha's favorite items when she was a mere jester. Acquired from a merchant who saw no use for a defective mirror, she used this often during a performance, inviting someone

to stand in front of the mirror to see their misshapen reflection. Laughter always seemed to follow.

The demon Tasha's Kiss thought to make the mirror a bit more exciting. Now, when a creature gazes upon its reflection the mirror causes their reflection to transform into a ghastly sight.

### Tasha's Hideous Mirror

*Wonderous item, very rare*

When this 4-foot tall mirror is viewed indirectly, scintillating, dim lights of green, red, and yellow dance along the mirror's glass. The mirror weighs 50 pounds, and it has AC 11, 25 hit points, and vulnerability to bludgeoning damage. It shatters and is destroyed when reduced to 0 hit points.

Any creature standing within 5 feet of the mirror who looks directly into it must succeed on a DC 15 Charisma saving throw. On a failure, the creature sees a horrifying reflection of itself and suffers from short-term madness for 1 minute.

Examples of horrifying reflections include:

- *Bulging, bloodshot eyes*
- *Large, thick, dangling warts*
- *An open stomach with spilled intestines*
- *Large, oozing sores*
- *Profusely bleeding gums and mouth*
- *Rearranged appendages*

On a successful save, the creature's reflection is distorted but not in a grotesque manner. It may see itself as overly rotund or tall.

## The Shortsword

The jester Tasha used this shortsword often during performances. Being a standalone act, she found its singing property to be quite useful as a prop.

Though now, the magic of the pocket dimension has changed the sword's properties.

### Tasha's Singing Sword

*Weapon (shortsword), very rare*

You gain +2 bonus to attack and damage rolls using this shortsword. The shortsword deals an additional 1d4 thunder damage on a successful hit.

While in the possession of a creature, the sword hums a melody the creature finds soothing or inspiring. Only the creature in possession of the weapon can hear the music.

When used in combat, the sword sings loudly, breaking out into a massive chorus of multiple voices. The emeralds in the hilt light up, pulsing with the rhythm of the song.

## The Brass Lyre

The famed lyre used by Tasha while singing and entertaining. Known as Maestro, the lyre is the talk of bards throughout the Realms.

### Maestro

*Wondrous item (lyre), very rare, (requires attunement by a bard)*

You gain +1 bonus to magical attack rolls made while using this magic lyre as your spellcasting focus.

A creature that attempts to play the instrument without being attuned to it must succeed on a **DC 15 Wisdom** saving throw or take 2d4 psychic damage.

You may use an action to play the instrument and cast one of its spells. Once the instrument has been used to cast a spell, it can't be used to cast a spell again until the next dawn. The spells use your spellcasting ability and spell save DC.

Spells: *alter self, comprehend languages, fly, levitate, magic mouth, misty step*

When you use the instrument to cast a spell that causes the target to become charmed on a failed save, the target has disadvantage on the saving throw. This effect applies whether you are using the instrument as the source of the spell or as a spellcasting focus.

### The Bed

The round bed is covered in exquisite red and black checkerboard satin sheets. Small waves chaotically ripple under the sheets.

The sheets are obviously unique and a creature succeeding on a **DC 12 Wisdom (Perception)** check believes them to be worth 100 gp. Though they have a musty smell and it appears that they have not been laundered for some time.

Removing the sheets reveals the strange bed the demon sleeps on. A unique forcefield holds the souls of nearly 100 humanoids, which create a slow, rippling motion in the mattress as they move about.

The field surrounding the souls can be broken, it has an AC 10 and 20 hit points. Once freed, the souls fly about the room and slowly dissipate as they whisper, "thank you".

### Gift from the Souls

The souls bestow a gift on the creature who freed them. Until the end of the adventure, that creature gains the following blessing:

***Blessing of Protection***: You gain a +1 bonus to AC and saving throws.

## Area 8: Feed Me

As the adventurers enter this room, read or summarize:

> A banquet hall stretches out before you. A nearby table is strewn with platters of cakes, pies, fruits, and smoked meats. Eight people dressed in fine, aristocratic attire sit with their plates full. They are in the middle of saying race.

Though the diners are dressed like aristocrats, they are actually **commoners** from the town. They are enchanted, believing themselves to be rich folk at a dinner table. Their true identities can be "pried" from the enchantment if the party begins asking questions about their pasts. The enchantment merely affects their "present" belief, not their past. Certain questions that will rouse confusion involve:

- What is your profession?
- Who are these people around you?
- How did you get here?
- Where do you vacation?
- Do you have any siblings?

Once the townsfolk realize that something is amiss they also realize they are being enchanted, and the spell breaks.

### Cursed Food

The food on the table is cursed. Anyone who eats from it must pass a **DC 12 Constitution** save or instantly gain 5 lbs. This check occurs after every bite. In addition, anyone who fails the Constitution save must make a **DC 12 Wisdom** save or else feel compelled to take another bite. Treat these saves as happening once per round for someone who eats continuously.

If targeted by the *calm emotions* or *lessor restoration* spell, the creature is no longer compelled to eat. However, the weight gained is permanent and lost through normal means.

### Village Eaters

Several villagers have started eating before the adventurers interrupt them. Even if interrupted, some villagers continue to eat. Use your discrepancy as a Dungeon Master to determine how many of these villagers are failing their saves (if you don't want to make several rolls) and allow the adventurers **DC 12 Wisdom (Perception)** checks to notice weight gain among the NPCs.

These NPCs urge the adventurers to eat.

- It's so good!
- The cherry pie is simply amazing!
- They have blood pudding!

### Compelled Eaters

Adventurers and NPCs enchanted to take more bites are aggressive towards anyone trying to stop them. They *MUST have* this food! Even people dying around them wouldn't cause them to stop eating.

Once they are fattened to the point of being unable to move, a chain with a hook lowers down from the ceiling and hoists them up. These hooks move along the ceiling like a slaughterhouse, toting the fattened victim to the Pies, Pigs, and Pudding room.

Food may be taken out of these rooms. However, it loses its *curse* effect and tastes funny.

### NPCs

Gentry's father, Migal, is in this room. A creature succeeding on a **DC 10 Wisdom (Perception)** check notices him eating at the table.

#### Madness

***Cursed Food:*** Once a compelled creature stops eating, it must succeed on a **DC 12 Wisdom** saving throw or gain short-term madness for 1d8 minutes.

That creature also gains one point of continuing madness.

#### Variant

To extend the adventure, you may wish to add other 'feeding rooms' throughout Tasha's Kiss' wagon. Feel free to diversify your "dining experience" should the adventurers encounter another one with a different menu and attire (villagers wearing orc attire and eating roasted meat around a victory campfire, wearing fine elven silks while suspended from a spider web bridge, etc.)

## Area 9: Pigs, Pies, and Puddings

As the adventurers enter this room, read or summarize:

> A massive contraption dominates the center of this room. Above you, obese people futilely wriggle from hooks as they are hoisted into a chute atop the contraption. Humanoid pigs, goats, cows, and chickens are preparing sweets around the machine.

The people being dropped into the contraption are fattened up villagers from the Feed Me Encounter. This is where Tasha's Kiss has them baked into treats. The abyssal contraption operates on dark magic, transforming villagers into pies, cakes, puddings, and other sweets that the humanoid animals decorate and garnish. The noise from the contraption would dominate the room if it weren't for the shouting villagers being dragged towards their fate.

The humanoid farm animals working with the sweets are aggressive towards intruders, they take their work very seriously. Armed with knives, cleavers, rolling pins, and hot torches, the workers descend upon the PCs if they feel their work risks being interrupted.

The animals are led by a shift manager. Roll 1d8 on the chart below to see who is in charge.

In addition to the Shift Manager, there are number of these **Humanoid Animals** for each adventurer (see Stat Block). Depending on their shift manager, they may be hostile from the start, or they may allow the adventurers a few turns to explain themselves. When fighting, the cooks select one adventurer and gang up on it, making opposed **Strength (Athletics)** checks to pin the adventurer to the ground, then attack in melee with advantage. No matter how many of them are slain, they do not turn their focus from the primary target unless magical means keep them from doing so.

**Variant**

The cooks are territorial and may be overly aggressive with the party. You may use the below variation if you wish to make this combat deadly.

Once one adventurer is unconscious, the cooks continue striking that adventurer, forcing it to automatically fail death saves for each hit.

Any adventurer who passes a **DC 15 Wisdom (Insight)** check before the fight starts realizes that the humanoid farm animals are shifting their gaze and intention in unison, and that should a fight break out, they will assault the same target. Smart adventurers may not initiate a fight until enemy focus is on the adventurer who can take the largest beating. Smarter adventurers may find ways around the fight altogether.

Let's look at some ways right now!

- ✓ ***Deggmir's Souls***. If the PCs arrive with any of Deggmir's jarred souls, the enemies assume they've brought "spice" for the food. They'll waft the soul over their recently prepped food, then thank the PCs by giving them one of the pies. The pie is not happy about this.

- ✓ ***RUN!*** Retreating during any part of the fight may work. The animals won't give chase, assuming they've triumphed over the intruders. The PCs can back out into any previous room and reassess the situation.

- ✓ ***Fit in.*** Druid shapeshifting, altering appearances, or just outright lying can confuse the enemies enough and maybe convince them that the PCs are "supposed to be here." The PCs, however, have to prove how well they can work as short order line cooks for food made from warped, fattened villagers.

- ✓ ***Dispel Magic.*** Casting *dispel magic* or *Tasha's Hideous Laughter* eliminates the spell that created these monsters, causing them to separate from an animal/humanoid hybrid form into its separated human and animal form. The animals behave like regular animals (most likely panicking), and the humanoid forms remember every foul deed they performed while magically combined with the animal to do Tasha's Kiss' bidding.

- ✓ ***Sneaky Stealthy Creep Mode.*** If the PCs can ride one of the hooks and chains up from the Feed Me encounter, they can hide behind the girth of a bloated townsfolk.

## The Machine

Destroying the contraption that's making food out of people saves many future townsfolk. It is a delicate piece of machinery, so any trauma inflicted on it (a hard sword whack, *shocking grasp*, etc) disables it for 1d6 rounds. The machine has HP 40 and AC 10.

Falling into the chute causes dark magic to infuse the victim's soul and life force into one of the pies, puddings, or pastries baking in the machine's oven. Eating food infused with someone's soul is an evil act, but the imbiber receives a potent, psychedelic infusion of the devoured soul's life, emotions, and desires. It's the equivalent of instantly uploading a full character arc from a favorite novel into your head at once.

### The Food Drop

Located near the machine is a 3-foot diameter hole, which is a one-way portal that teleports the food to one of the tables in Area 10: The Banquet Bin. A creature using this portal finds itself sitting on a banquet table and looking at Tasha's Kiss. The fiend attacks the intruder.

#### Madness

The scene of the machine being fed with humanoids and the bizarre-looking chefs may be too much for some creatures. Any creature that can see and enters this room must succeed on a **DC 12 Wisdom** saving throw or suffer short-term madness for 1d6 minutes.

That creature also gains one point of continuing madness.

#### Scaling Combat

**APL 3:** 1 Shift Manager
3 Humanoid Animals per adventurer

**APL 5:** 1 Shift Manager
4 Humanoid Animals per adventurer

**APL 7:** 2 Shift Managers
4 Humanoid Animals per adventurer
Adjust all: AC 12, 65 HP
+5 to hit

**APL 10:** 2 Shift Managers
4 Humanoid Animals per adventurer
Adjust all: AC 13, 90 HP
+6 to hit

## Shift Manager Table:

| d8 result | NAME AND SPECIES | DESCRIPTOR |
|---|---|---|
| *1* | ***Rodrigo the Rooster (chicken)*** | Dictator, stern, smells like maggot cheese, afraid of birds, hates the way men sound. |
| *2* | ***Hammiria the Hen (chicken)*** | Skittish, explosive. Smiles too much. Stares too much. Collects fingers and toes too much. |
| *3* | ***Julianna the Cow (cattle)*** | Obsessive. Wants to slaughter the adventurers, but orders one to be spared as a "suitable mate." |
| *4* | ***Cyffillis the Bull (cattle)*** | Lazy, cowardly, dimwitted. Wants to be freed. Turns on coworkers or adventurers as seems fitting. |
| *5* | ***Kadmir the Billy (goat)*** | Twice as large as the largest adventurer. Has twice that adventurer's hit points. Moves at half that adventurer's speed. |
| *6* | ***Inchira the Nanny (goat)*** | Possessed by Stirr, a hypo-demon who is insane. Can cast *hellish rebuke* 3/day. |
| *7* | ***Luddvera the Sow (pig)*** | Violates every category on the health code. Eats the adventurers' body parts as it fights them. SHOUTS! |
| *8* | ***Brachin the Boar (pig)*** | Blood drips from eyes. Wears a necklace of 7 eyeballs. Can squish one each turn to cast *blind/deaf*. |

# Part 3: Tasha's Kiss

Estimated run-time: 20 minutes

The adventurers have made their way to the Banquet Bin, where the fiend feasts on the food prepared by the Humanoid Animal chefs.

## Area 10: The Banquet Bin

As the adventurers enter this room, read or summarize:

> A red and black tiled floor stretches into darkness. The tiles are five square feet each. Empty baking pans, dirty plates, and discarded silverware are scattered across the floor. An old lady sweeps the near infinite mess into a pile, but more debris clatters down from the ceiling every few seconds. A single candle near the old lady lights the floor with bright light in a 20-foot radius, then dim light for an additional 20 feet.

The party is in a gigantic, cylindrical rubbish bin 200 feet in diameter and an infinite amount of feet deep. The old lady is a member of the town, spared by Tasha's Kiss to sweep up dinnerware that has been used to plate her own neighbors. The woman's eyes and mouth are sewn shut, but she can hear well enough. A PC using a bladed tool and making a successful **DC 15 Wisdom (Medicine)** or **Dexterity (Sleight of Hand)** check can remove the stitching, allowing her to speak and see (her eyeballs weren't removed).

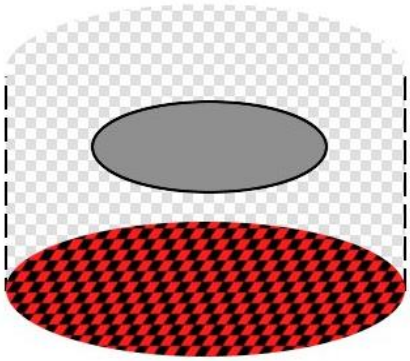

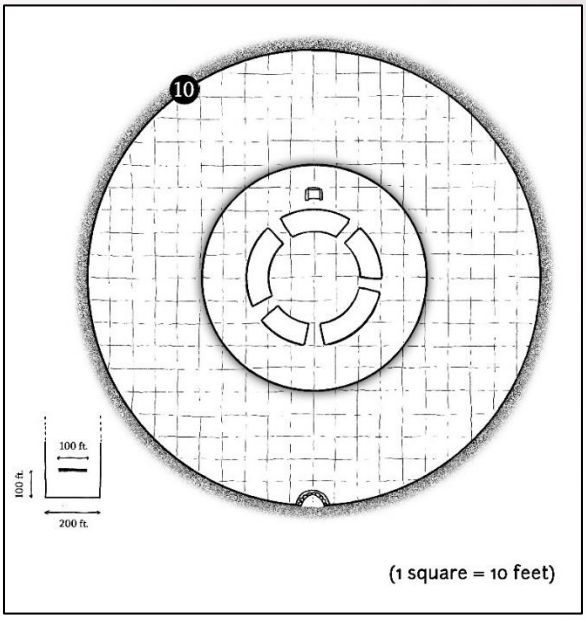


### The Wall and the White Tiles

The edges of the circular wall are tiled just like the bottom, but with white and black tiles. Touching the white tiles causes them to extend five feet from the wall, creating a 5 ft. by 5 ft. block that can extend as far out into the room as needed. Tapping these tiles in succession can create a blocky set of stairs to reach the top.

### The Candle and the Red Tiles

The candle is ever-burning--it does not go out. The old woman has it with her so that anyone peering into the rubbish bin from above can make sure she is working. It also keeps the 3,141 **Red Tiles** at bay. Hundreds of red tiles are just out of range of the candle's 40-foot total light radius, and any other sources of light also cause the red tiles to retreat. Creatures with darkvision can see the red tiles if their vision extends the reach of any light source--the red tiles swarm like bugs, trying to get at a light filament surrounded by a glass bulb. They make no noise whatsoever.

If a character steps into darkness or if the candle is somehow extinguished, 3,141 red tiles descend upon the living creatures, bludgeoning them into unconsciousness. If none of its allies remain conscious, all creatures bludgeoned by the Red Tiles awaken in the feeding room, sitting at the dinner table, compelled to eat. Each creature must succeed on a **DC 15 Wisdom** saving throw. Failure results in the creature eating something from the table.

## Tasha's Kiss

Seated on a circular dais floating 100 feet above the rubbish bin floor is Tasha's Kiss herself. The dais is 100 feet in diameter and rimmed with buffet tables lavished with food. Tasha's Kiss sits on a gigantic throne that revolves around the dais like the hand of a clock. Darkness extends above her into cosmic nothingness. Tasha's Kiss is feasting on the food, tossing the emptied plates into the rubbish bin below.

She is gaunt, her black and red harlequin jester outfit hanging loosely from her frail body. In her mouth are ten rows of teeth, and her lips are in tatters from her endless feasting. She stands fifteen feet tall, but sits hunched over, face buried in her meals. Her spider-like legs and bony knees splay out to the side. She always knows where the adventurers are, and when she speaks, she does so via telepathy. She never stops eating.

## Engaging Tasha's Kiss

Once combat initiative is rolled, PCs immediately feel the room grow hotter. Tasha's Kiss has activated "the oven." Each turn, a PC must succeed a **DC 10+X Constitution** save where X = the number of times Tasha's Kiss has had a turn in combat. Failure means taking 1d4 fire damage. Tasha's Kiss can end this effect willingly. It automatically ends once she dies.

Tasha's Kiss only stops eating to use her Kiss ability, and she prefers to fight defensively, allowing the PC affected by her Kiss to distract the rest of the party. In dire moments, she uses her spider climb ability to cling to the bottom of the dais.

## Rebirth

Each time Tasha's Kiss takes 30 points of damage, she vomits up one of the souls she has eaten in the form of a new NPC that may join the fight. These NPCs have been imprisoned by Tasha's Kiss ever since she ate them, trapped in a guttural hellscape crammed with thousands of other devoured souls. These NPCs enter initiative order as soon as possible. They have no weapons aside from natural ones, though may wield one given to them by someone else.

Roll 1d20 and consult the Rebirth table.

## Allies

If you find the combat too easy, Tasha's Kiss can summon Red Tiles to assist her. Five of these reds tiles may join together to form a larger threat – a **Red Tile Golem**.

## Non-Combat Solution

There are several ways the party may attempt to release the jester from the fiend's possession. If they are successful, the monstrosity suffers 40 points of necrotic damage while it regurgitates the original jester. The monstrosity continues to fight, but the jester is too dazed to be of any help.

- ✓ Using the Teacup found in the bedroom to persuade the jester to fight control. Both the party and the jester must succeed on a **DC 14 Charisa (Persuasion)** check.

- ✓ Casting remove curse on the fiend allows the persona of the jester to come to the surface for 3 rounds. During that time, the party may attempt to persuade the jester to fight the fiend's control. Both the party and the jester must succeed on a **DC 14 Charisma (Persuasion)** check.

- ✓ If the party comes up with another solution, use your skills as a Dungeon Master to determine if it is viable and to set the DCs.

## Rebirth Table:

| | |
|---|---|
| 1 | Ragni Tokk, a female **orc** spear-kin guard. Enraged, spiteful, brash. |
| 2 | Sammi Gill, a female human baker **commoner**. Mad with insanity. |
| 3 | Old Baldrick, a male human fisherman **commoner** who can't stop crying. |
| 4 | Kyn Kole, a male high elf farmer **commoner** who thinks everyone is a foe. |
| 5 | Mayor Redberry, a female halfling **noble** out to avenge her devoured town. |
| 6 | Der Ingot, a male dwarf **commoner** anxious to "go back in to rescue me wife!" |
| 7 | Yert, a female **goblin** who won't stop shouting, "We were the pies! We were the pies!" |
| 8 | Kade Jonn, a female **guard** who warned her town that Tasha's Kiss was evil. |
| 9 | Bipsy, a male **commoner** jester who had an ill-fated one-night stand with Tasha's Kiss. |
| 10 | Gerina Cane, a female **commoner** child who can't find her parents. |
| 11 | Todd Marcus, a male **gladiator** sellsword who tried to flee the town he swore to protect. |
| 12 | Simona Lorin, a female **priest** of Chauntea, guilt-ridden for letting Tasha's Kiss into town. |
| 13 | Grodda Fenshield, a female dwarf **commoner** great-grandmother in hysterics. |
| 14 | Lynn Tai, a male courrier **commoner** sent to warn the neighboring townships. |
| 15 | Abbi Yarra, a female human **cultist** who believes Tasha's Kiss is a new god. |
| 16 | Lorren of Lost, a female **bandit captain** |
| 17 | Hexagrysttl, a **black dragon wyrmling** who lived with some now-devoured hobgoblins. |
| 18 | Polli, a female **druid** of the Emerald Enclave who had been stalking Tasha's Kiss. |
| 19 | Kani the Stride, a female **scout** claiming she "did my best, but the demon was better." |
| 20 | Hemp Gladewind, a male elf **commoner** adolescent paralyzed with fear. |

# Part 4: Conclusion

Estimated run-time: 20 minutes

The adventurers have either succeeded in defeating Tasha's Kiss, killing both the fiend and the jester, or they have released the jester from the fiend's possession.

## Aftermath

Once slain, Tasha's Kiss' stomach prolapses out of her mouth, and the hundreds of people she has devoured are vomited up. As they pile around in disheveled, panicked masses, the dimension itself begins to break apart. If Tasha's Kiss was slain on the dais, the adventurers must make a **DC 12 Strength** saving throw or be pushed off the edge, taking 70 (20d6) falling damage if they hit the ground below. Several NPCs fall as well. If you do not wish for the adventurers to take such a massive amount of damage, have Tasha's Kiss' dimension crumble away before they make impact. Also, don't forget that the **red tiles** might still be down there.

Once the dimension crumbles away, the party and any NPCs they have encountered as well as surviving town citizens appear scattered around the starting town. Thousands of displaced citizens of various races are in a panic. Chances are the party will have to establish some kind of order or risk hundreds dying in the chaos.

The party may choose to leave the people to their own means, or the PCs can relocate a group of refugees back to their town. You may decide to have the townsfolk establish their own hyper-mixed economy, forming a thriving city state after a few years of settlement. Either way, once Tasha's Kiss is defeated, cleaning up the mess she has made can give your players plenty of options in the future.

If the original Tasha's Kiss was saved before the fiend was killed, she rewards the party with 500 gp worth of gemstones which she kept in a hidden compartment in her wagon.

## We hoped you enjoyed our mad adventure.
## Please check out our other products!

### *Remley Farr*

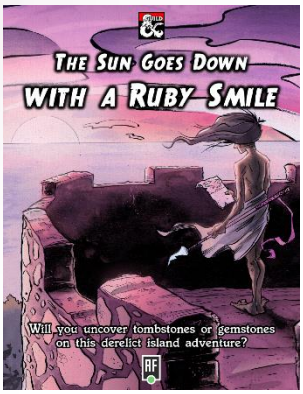


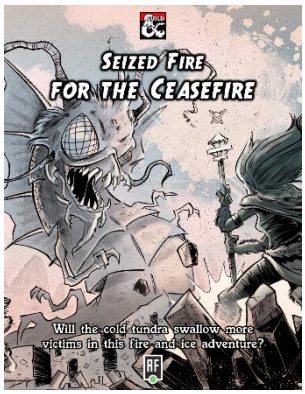


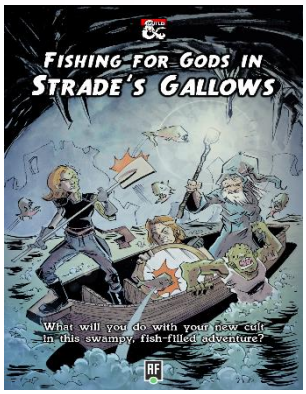


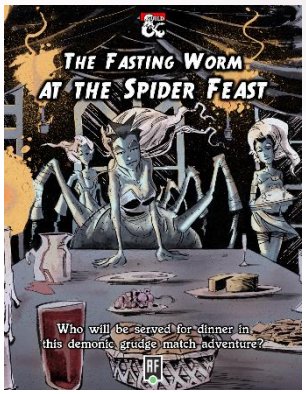


### *Jeff C. Stevens*

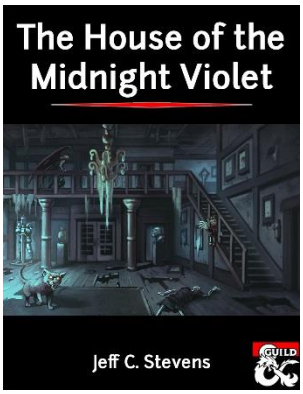


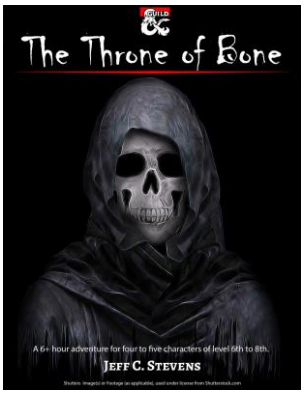


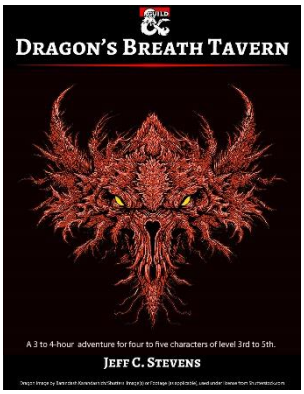


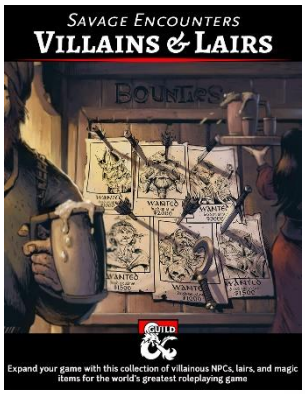


## Please take a moment to leave a rating or review on the Dungeon Masters Guild!

## Questions or comments? You can reach me via email at jcorvinstevens@gmail.com

# Creatures of the Madhouse

## Dream Weaver

*Small humanoid, unaligned*

**Armor Class** 13
**Hit Points** 27 (5d8 + 5)
**Speed** 25 ft.

| STR | DEX | CON | INT | WIS | CHA |
|---|---|---|---|---|---|
| 10 (+0) | 16 (+3) | 12 (+1) | 10 (+0) | 10 (+0) | 12 (+1) |

**Condition Immunities** blinded
**Senses** blindsight 30 ft., passive Perception 10
**Languages** telepathy 120 ft.
**Challenge** 1 (200 XP)

Actions

***Multiattack.*** The Dream Weaver makes two melee attacks with its weaver prod or uses its mind blast once.

***Weaver Prod.*** *Melee Weapon Attack:* +2 to hit, reach 5 ft., one target. *Hit:* 3 (1d6) piercing damage plus 1 lightning damage.

***Mind Blast (Recharge 5-6).*** The Dream Weaver magically emits energy in a 30-foot cone. Each creature in that area must succeed on a DC 12 Intelligence saving throw or take 5 (1d8) psychic damage and be stunned for until the end of its next turn.

### Weaver Prod

*Weapon, uncommon*

Formed from the breath of a blue dragon, the Weaver Prod is a 12-inch long piece of jagged, blue glass fastened to a wooden handle. The glass contains a residual charge from the dragon's breath weapon.

On a hit, the Weaver Prod deals 1d6 piercing damage plus 1 lightning damage.

## Affavara

*Large Monstrosity, neutral evil*

**Armor Class** 15 (natural armor)
**Hit Points** 82 (11d10 + 22)
**Speed** 20 ft.

| STR | DEX | CON | INT | WIS | CHA |
|---|---|---|---|---|---|
| 18 (+4) | 8 (-1) | 15 (+2) | 10 (+0) | 14 (+2) | 10 (+0) |

**Skills** Perception +6
**Senses** darkvision 60 ft., passive Perception 16
**Languages** Common, Elvish
**Challenge** 5 (1,800 XP)

***Grasping Tentacles.*** Affavara can have up to eight tendrils at a time. Each tendril can be attacked (AC 15; 10 hit points; immunity to psychic damage). Destroying a tendril deals no damage to Affavara, who can extrude a replacement tendril on her next turn. A tendril can also be broken if a creature takes an action and succeeds on a DC 15 Strength check against it.

Actions

***Multiattack.*** Affavara makes five attacks with her tentacles, uses Reel, and makes one attack with her bite.

***Bite.*** *Melee Weapon Attack:* +7 to hit, reach 5 ft., one target. *Hit:* 12 (2d8 + 4) piercing damage.

***Tentacle.*** *Melee Attack:* +7 to hit, reach 25 ft., one creature. *Hit.* The target is grappled (escape DC 15). Until the grapple ends, the target is restrained and has disadvantage on Strength checks and Strength saving throws, and Affavara can use the same tentacle on another target.

***Reel.*** Affavara pulls each creature grappled by her up to 10 feet straight forward.

## Humanoid Animal

*Medium humanoid, chaotic neutral*

**Armor Class** 11 (leather armor / apron)
**Hit Points** 32 (5d8 + 10)
**Speed** 30 ft.

| STR | DEX | CON | INT | WIS | CHA |
|---|---|---|---|---|---|
| 15 (+2) | 11 (+0) | 14 (+2) | 10 (+0) | 10 (+0) | 11 (+0) |

**Senses** passive Perception 10
**Languages** Common, Abyssal
**Challenge** 1/2 (100 XP)

***Pack Tactics.*** The hybrid humanoid has advantage on an attack roll against a creature if at least one of its allies is within 5 feet of the creature and the ally isn't incapacitated.

Actions

***Multiattack:*** The hybrid humanoid makes two attacks, one with its cleaver and one with its special attack

***Cleaver.*** *Melee Weapon Attack:* +4 to hit, reach 5 ft., one creature. *Hit:* 4 (1d4 + 2) slashing damage.

**Depending on the hybrid, the humanoid has the following special attack.**

***Pig - Belly Bump.*** *Melee Weapon Attack.* +4 to hit, reach 5 ft., one creature. *Hit*: 4 (1d4 + 2) bludgeoning damage. On a hit, the target must succeed on a DC 10 Strength saving throw or be pushed back 5 feet.

***Chicken - Beak.*** *Melee Weapon Attack.* +4 to hit, reach 5 ft., one creature. *Hit*: 4 (1d4 + 2) piercing damage.

***Cow - Kick.*** *Melee Weapon Attack.* +4 to hit, reach 5 ft., one creature. *Hit:* 4 (1d4 + 2) piercing damage.

***Goat – Head Butt.*** *Melee Weapon Attack.* +4 to hit, reach 5 ft., one creature. *Hit:* 4 (1d4 + 2) piercing damage. On a hit, the target must succeed on a DC 10 Strength saving throw or be knocked prone.

## Deggmir, Winnower of Souls

*Medium human, Neutral Evil*

**Armor Class** 16 (natural armor)
**Hit Points** 85 (10d8 + 40)
**Speed** 30 ft.

| STR | DEX | CON | INT | WIS | CHA |
|---|---|---|---|---|---|
| 18 (+4) | 15 (+2) | 18 (+4) | 11 (+0) | 12 (+1) | 10 (+0) |

**Saving Throws** Con +7, Wis +4. Cha +3
**Condition Immunities** poisoned
**Senses** passive Perception 11
**Languages** Abyssal, Common, Infernal
**Challenge** 6 (2,300 XP)

Actions

***Multiattack.*** Deggmir makes two attacks with his chains.

***Chain.*** *Melee Weapon Attack:* +8 to hit, reach 10 ft., one target. *Hit:* 11 (2d6 + 4) slashing damage. The target is grappled (escape DC 14) if Deggmir isn't already grappling a creature. Until this grapple ends, the target is restrained and takes 7 (2d6) piercing damage at the start of each of its turns.

***Animate Chains. (Recharges after a Short or Long Rest).*** Up to three chains Deggmir can see within 60 feet of him magically sprout razor-edged barbs and animate under his control, provided that the chains aren't being worn or carried.

Each animated chain is an object with AC 15, 20 hit points, resistance to piercing damage, and immunity to psychic and thunder damage. When Deggmir uses Multiattack on his turn, he can use each animated chain to make on additional attack. An animated chain can grapple one creature of its own but can't make attacks while grappling. An animated chain reverts to its inanimate state if reduced to 0 hit points or if Deggmir is incapacitated or dies.

Reactions

***Soul Scent.*** When a creature that Deggmir can smell starts its turn within 30 feet of him, Deggmir can know the creature's "purpose" in life. If that creature is a PC, then Deggmir knows that PC's ideals and bonds as listed on the player's character sheet.

## Red Tile

*Medium construct, unaligned*

**Armor Class** 10
**Hit Points** 11 (2d8 + 2)
**Speed** 30 ft.

| STR | DEX | CON | INT | WIS | CHA |
|---|---|---|---|---|---|
| 12 (+1) | 13 (+1) | 12 (+1) | 6 (-2) | 10 (+0) | 6 (-2) |

**Senses** Truesight 120 ft., passive Perception 10
**Languages** Abyssal
**Challenge** 1/4 (50 XP)

Actions

***Slam.*** *Melee Weapon Attack:* +3 to hit, reach 5 ft., one creature. *Hit:* 3 (1d4 + 1) bludgeoning damage.

## Red Tile Golem

*Each golem consists or five Red Tiles*
*Medium construct, unaligned*
**Armor Class** 10
**Hit Points** 50 (10d8 + 10)
**Speed** 30 ft.

| STR | DEX | CON | INT | WIS | CHA |
|---|---|---|---|---|---|
| 15 (+2) | 13 (+1) | 12 (+1) | 6 (-2) | 10 (+0) | 6 (-2) |

**Condition Immunities** charmed, exhaustion, frightened, paralyzed, petrified, poisoned.
**Damage Vulnerabilities** fire, radiant
**Damage Resistances** bludgeoning, piercing, and slashing from nonmagical attacks.
**Senses** Truesight 120 ft., passive Perception 10
**Languages** Abyssal
**Challenge** 3 (50 XP)

***Aversion of Fire.*** If the golem takes fire or radiant damage, it has disadvantage on attack rolls and ability checks until the end of its next turn.

***Magic Resistance.*** The golem has advantage on saving throws against spells and other magical effects.

Actions

***Multiattack:*** The Red Tile golem makes two slam attacks

***Slam.*** *Melee Weapon Attack:* +5 to hit, reach 5 ft., one creature. *Hit:* 12 (5d4 + 2) bludgeoning damage.

## Tasha's Kiss (Demon)

*Large fiend (demon), chaotic evil*

**Armor Class** 15 (natural armor)
**Hit Points** 120 (14d10 + 36)
**Speed** 30 ft., climb 30 ft.

| STR | DEX | CON | INT | WIS | CHA |
|---|---|---|---|---|---|
| 16 (+3) | 15 (+2) | 16 (+3) | 12 (+1) | 12 (+1) | 17 (+3) |

**Saving Throws** DEX +6, CHA +7
**Skills** Deception +7, Perception +5, Perform +7, Sleight of Hand +7
**Condition Immunities** fear, poisoned
**Damage Immunities** psychic
**Senses** blindsight 30 ft., darkvision 120 ft., passive Perception 15
**Languages** Common, Abyssal, telepathy 120 ft.
**Challenge** 7 (2,900 XP)

***Magic Resistance.*** Tasha's Kiss has advantage on saving throws against spells and other magical effects.

***Spider Climb.*** Tasha's Kiss can climb difficult surfaces, including upside down on ceilings, without needing to make an ability check.

Actions

***Multiattack.*** Tasha's Kiss makes two claw attacks, or one claw attack and one kiss attack.

***Claw.*** *Melee Weapon Attack:* +7 to hit, reach 15 ft., one creature. *Hit:* 10 (2d6 + 3) slashing damage and the target is grappled (escape DC 15). Until the grapple ends, the target is restrained and has disadvantage on Strength checks and saving throws, and Tasha's Kiss can't use the same claw on another target. Tasha's Kiss can have a total of two targets grappled at one time.

***Horrific Appearance.*** As an action, the demon can change her features into something gruesome and horrific. Each non-undead creature within 60 feet of Tasha's Kiss that can see it must succeed on a DC 15 Wisdom saving throw or be frightened for 1 minute. A frightened target can repeat the saving throw at the end of each of its turns, ending the frightened condition on itself on a success. If a target succeeds on the saving throw or the effect ends on it, the target is immune to Tasha's Kiss' Horrifying Visage for the next 24 hours.

***Kiss (Recharge 5-6).*** *Melee Weapon Attack:* +7 to hit, reach 5 ft., one creature. *Hit:* 7 (2d6) necrotic damage and the target must succeed on a DC 15 Wisdom saving throw or be magically charmed for 1d6 rounds. The charmed target obeys Tasha's Kiss' verbal or telepathic commands. If the target suffers any harm or receives a suicidal command, it can repeat the saving throw, ending the effect on a success. If the target successfully saves against the effect, or if the effect ends, the target is immune to the kiss charm effect for the next 24 hours. Tasha's Kiss can have only one target charmed at a time. If she charms another creature, the effect on the previous creature ends.

### Variants

***APL 3:***
*Challenge Rating 3*
*AC 13*
*101 Hit Points*
*Claw attack: +5 to hit*
*Kiss attack: +5 to hit, save DC 13*
*Horrific Appearance DC 13*

***APL 5:***
*Challenge Rating 5*
*AC 14*
*115 Hit Points*
*Claw attack: +6 to hit*
*Kiss attack: +6 to hit, save DC 14*
*Horrific Appearance DC 14*

***APL 10:***
*Challenge Rating 10*
*AC 17*
*215 Hit Points*
*Claw attack: +10 to hit*
*Kiss attack: +10 to hit, save DC 16*
*Horrific Appearance DC 16*
*Multiattack – increase to three attacks.*

### Spells

*You may wish to consider giving Tasha's Kiss the below innate spellcasting abilities (spell save DC 14, +6 to hit with spell attacks):*

*Cantrips: friends, mage hand, vicious mockery*
*1st level (2/day): charm person, Tasha's Hideous Laughter*
*2nd level (2/day): suggestion*
*3rd level (1/day): hypnotic pattern*

## Character Madness Tracker

### Character Name: _____

(Put a check in the below whenever you fail a Madness Save)

- ○ **Failed Madness Save**
  **Result** _____

- ○ **Failed Madness Save**
  **Result** _____

- ○ **Failed Madness Save (Roll on Long-Term Madness Table)**
  **Result** _____

- ○ **Failed Madness Save**
  **Result** _____

- ○ **Failed Madness Save (Roll on Indefinite Madness Table)**
  **Result** _____

- ○ **Failed Madness Save**
  **Result** _____

- ○ **Failed Madness Save**
  **Result** _____

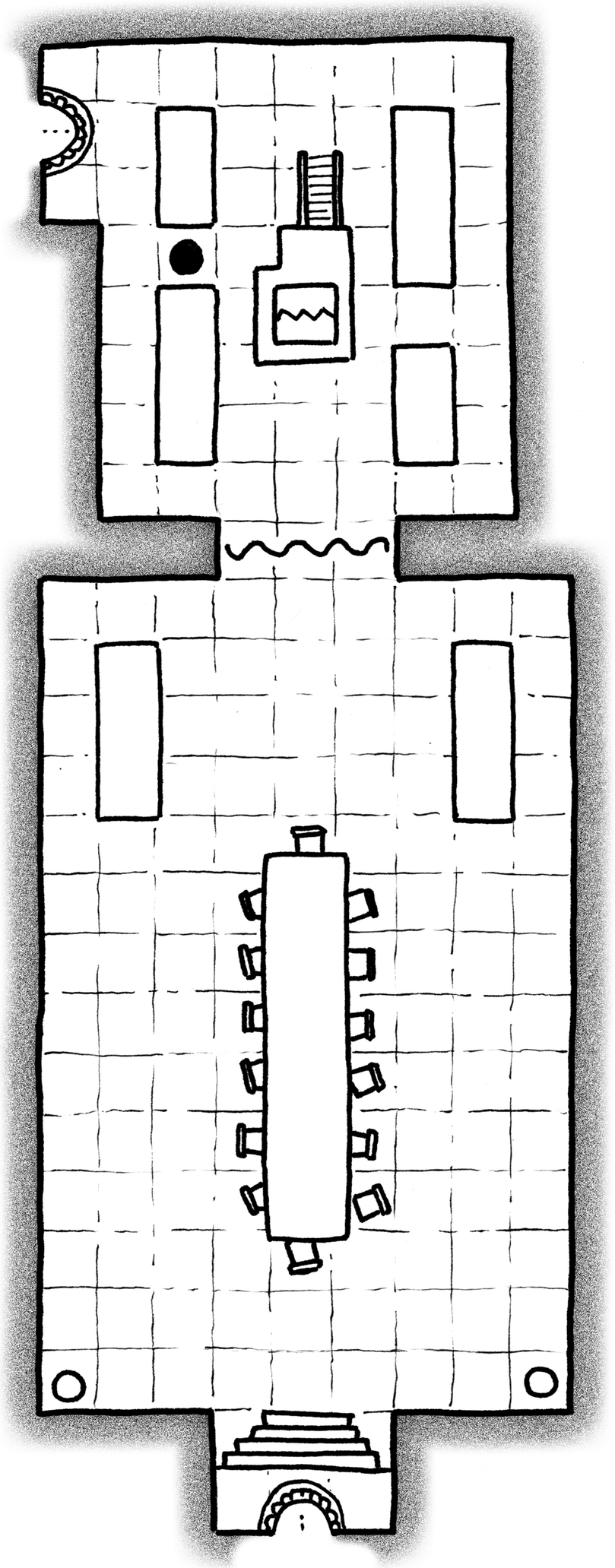

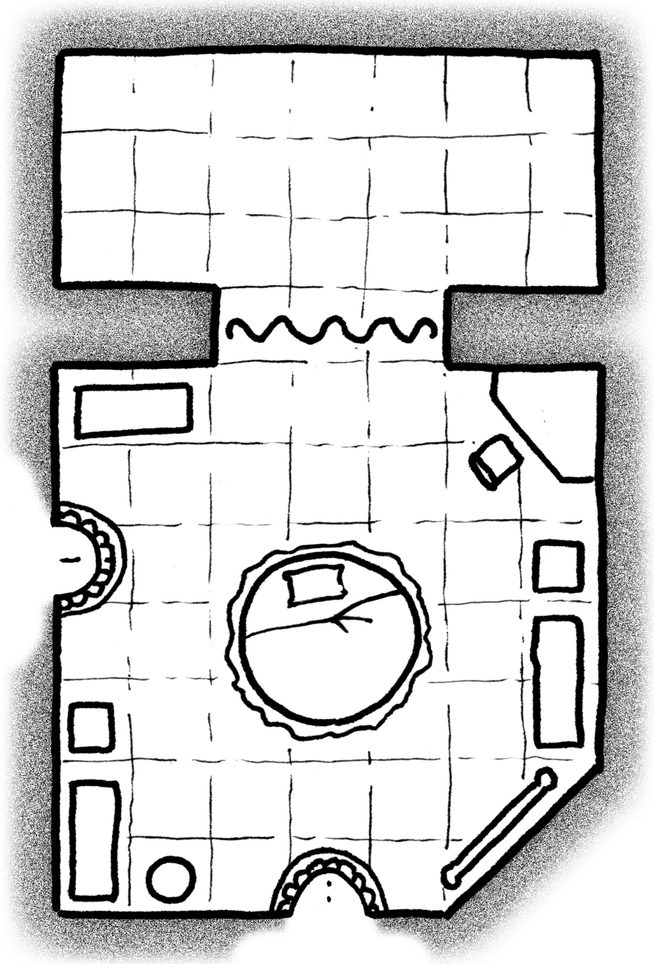

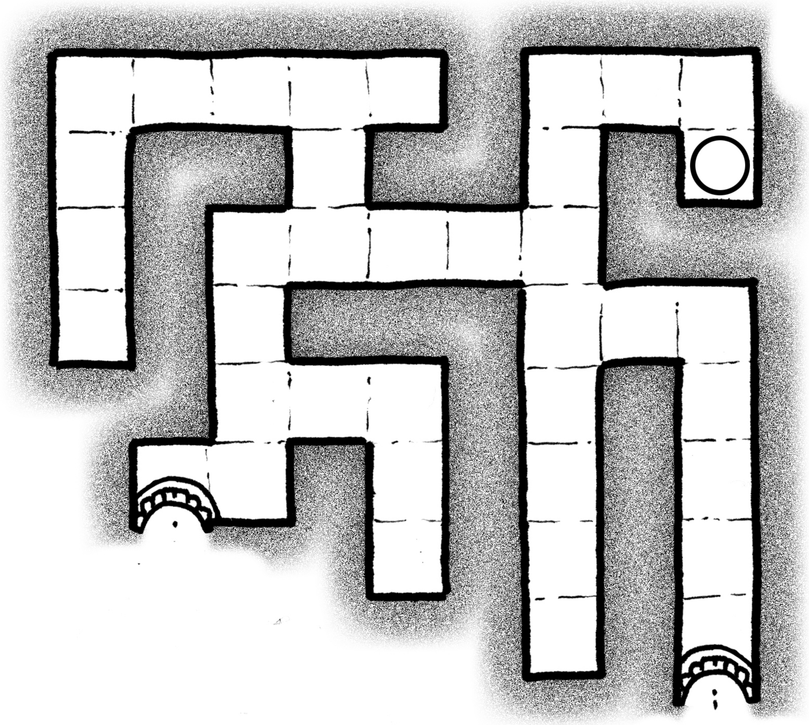

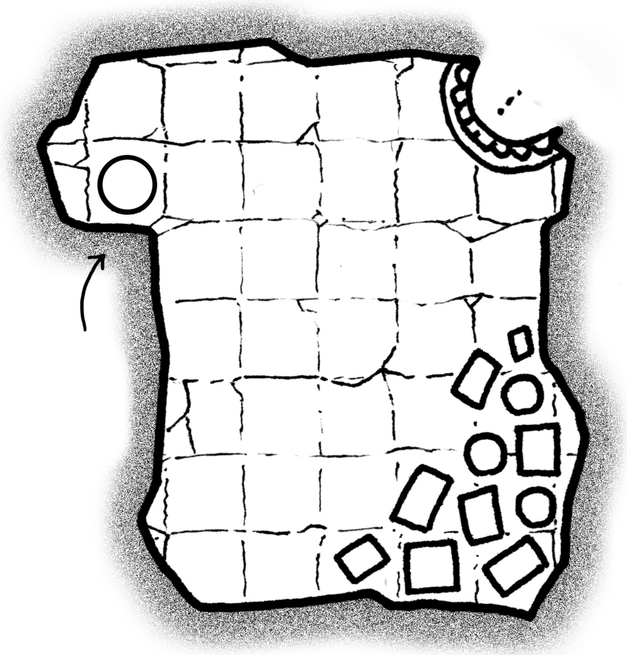

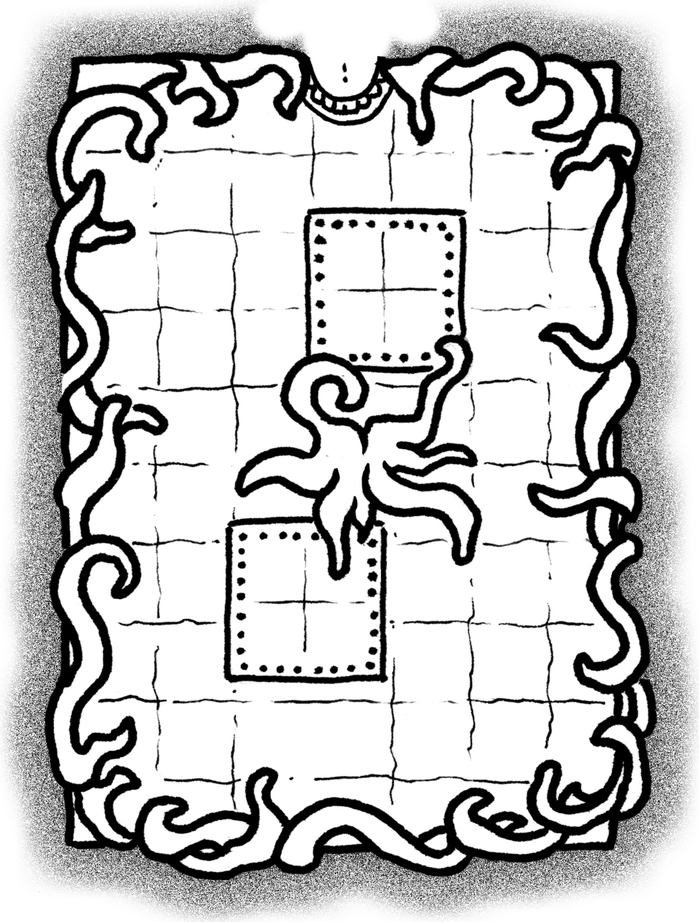

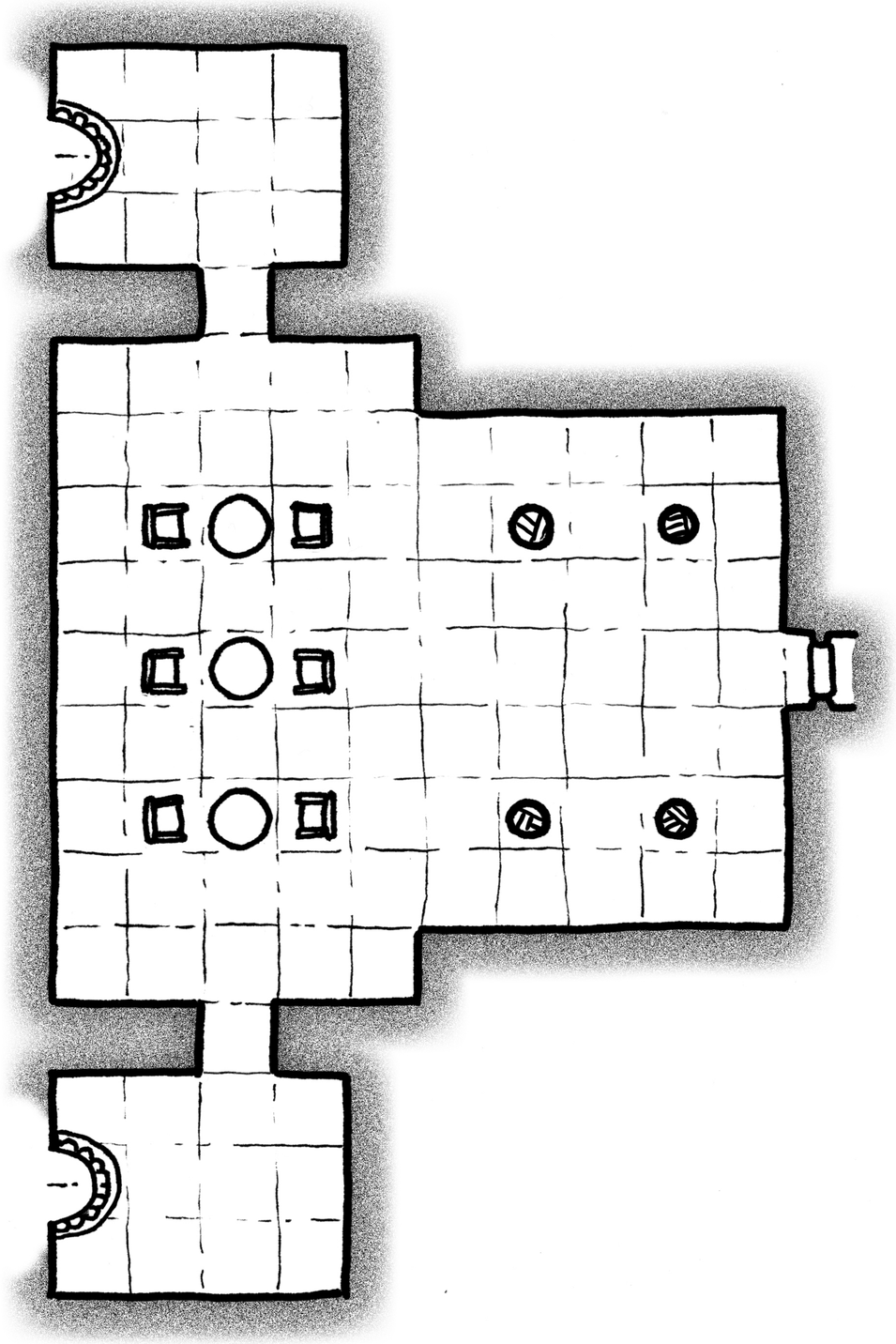

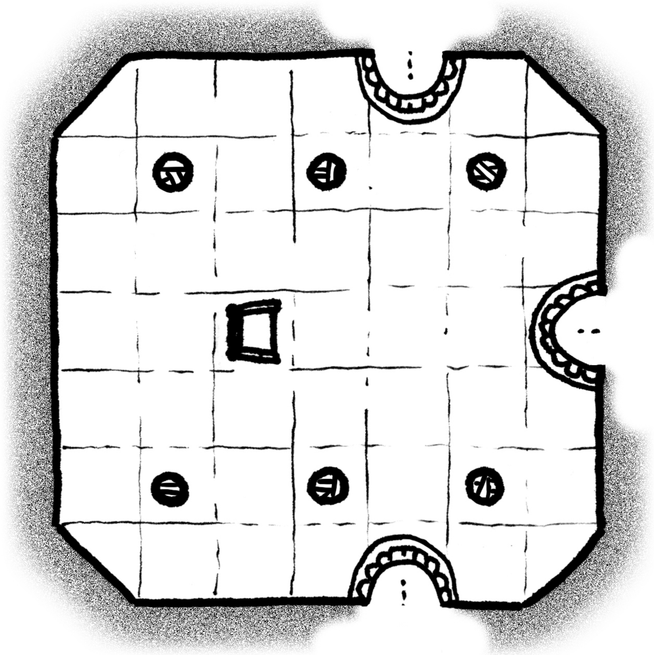

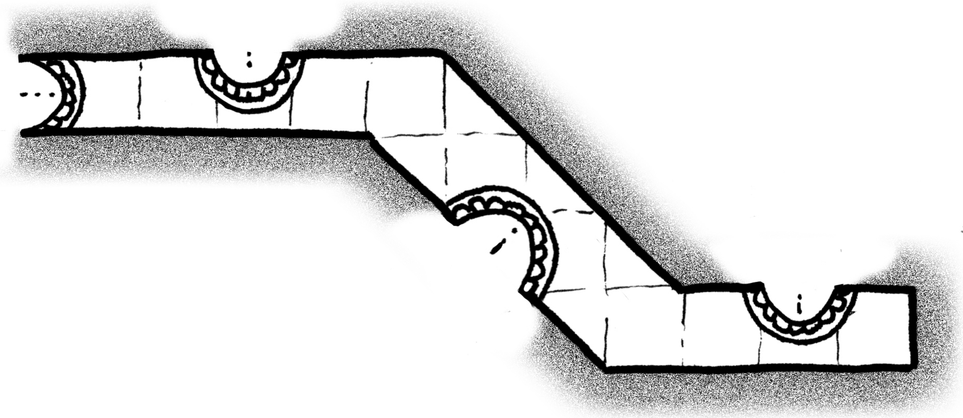

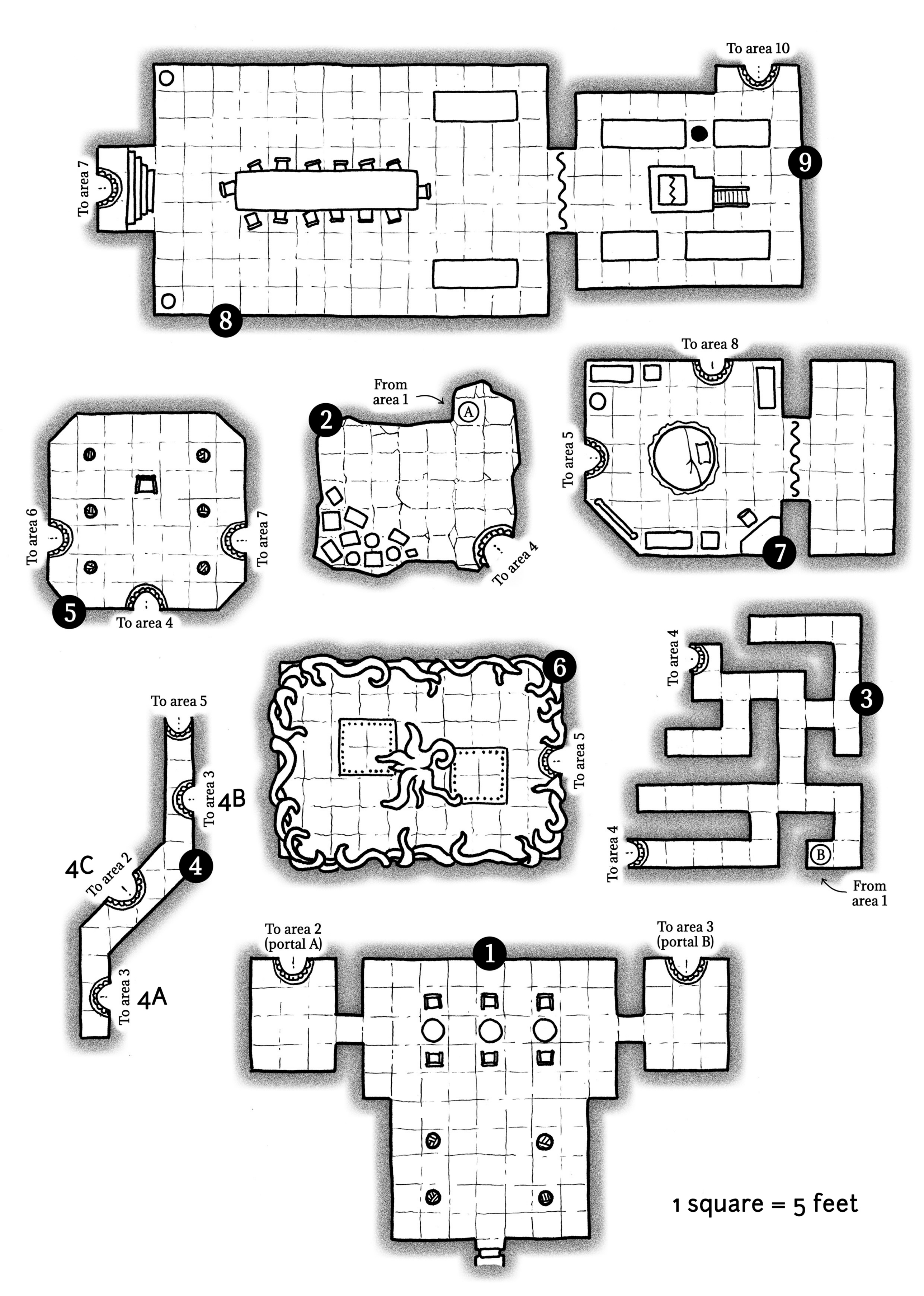
To area 10
To area 7
9
8
To area 8
From area 1
A
2
To area 5
To area 6
To area 7
To area 4
7
5
To area 4
6
To area 5
To area 4
3
To area 5
To area 3
4B
4C
To area 2
4
To area 4
B
From area 1
To area 3
4A
To area 2 (portal A)
1
To area 3 (portal B)
1 square = 5 feet

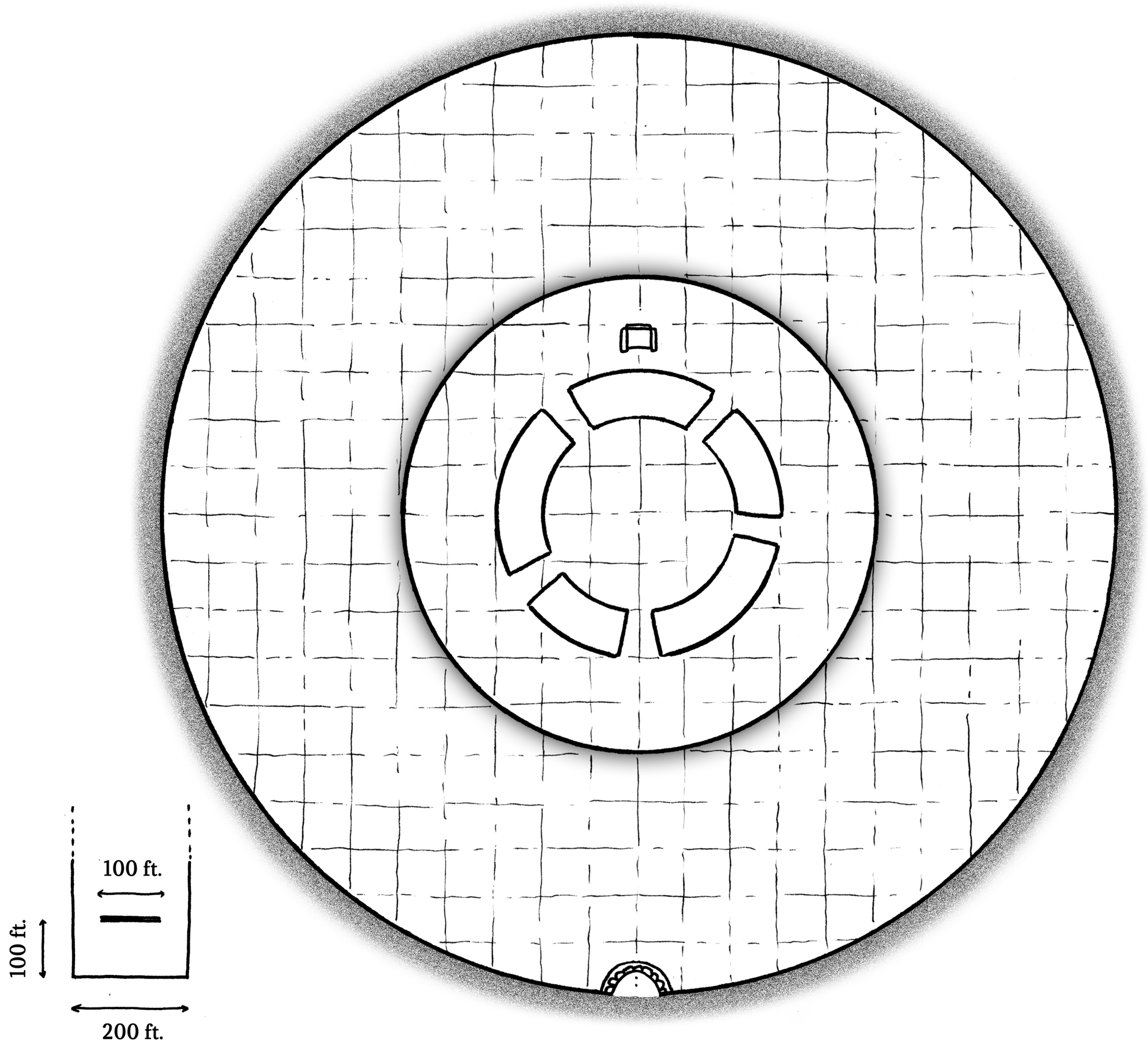


(1 square = 10 feet)

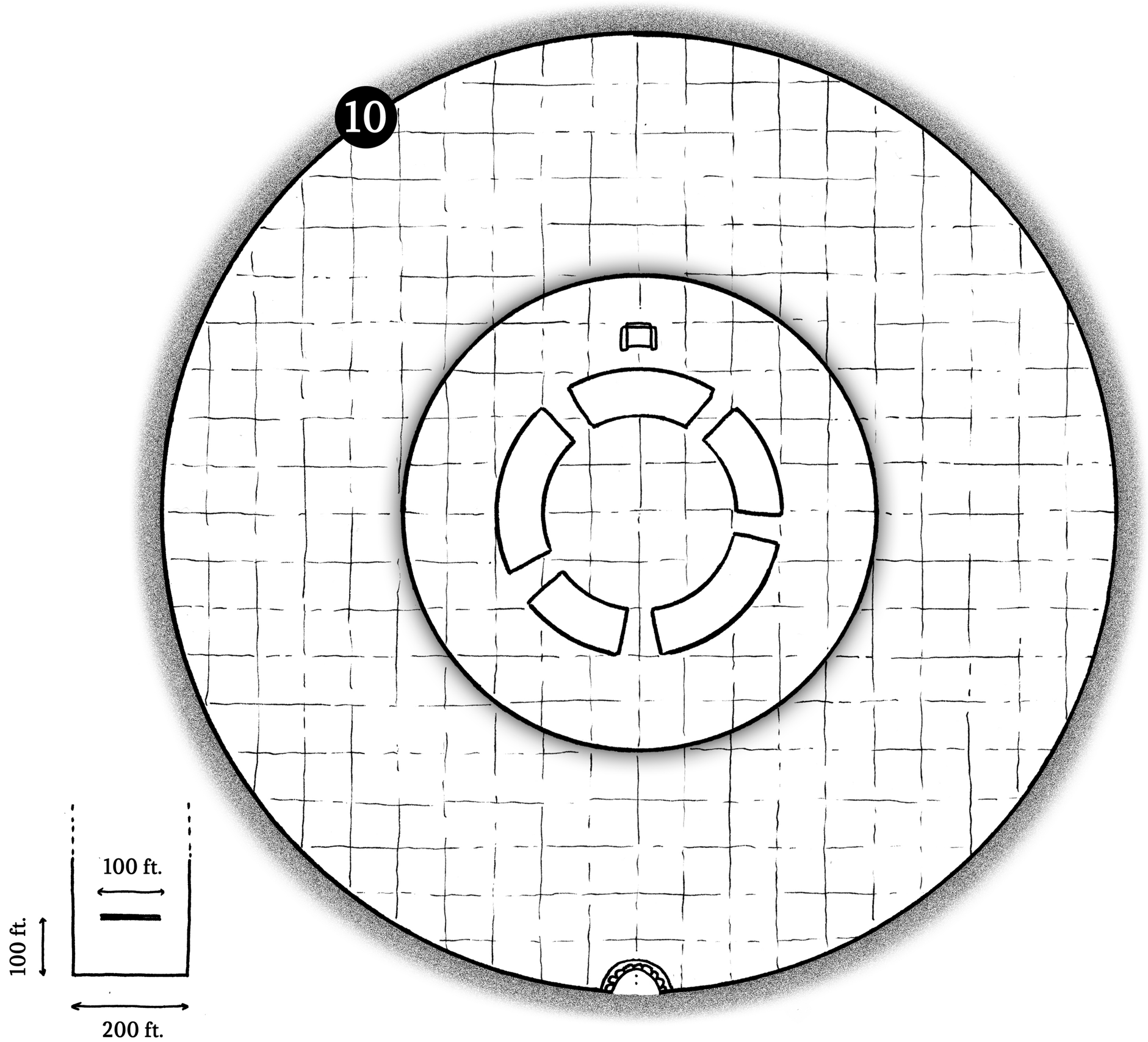


(1 square = 10 feet)